Municipio Autónomo de Caguas
Guías para la presentación de propuestas para los servicios de renovación, administración, mantenimiento y reparación de la flota vehicular

PREGUNTAS (P) Y RESPUESTAS (R)

Antes de responder a cada una de las preguntas sometidas por las compañías participantes, es importante recordar que el Municipio aceptará propuestas alternas que describan términos y condiciones diferentes a los expuestos en el documento de RFP y evaluará si las mismas tienen los méritos para satisfacer y cumplir con los servicios requeridos (según se estipuló en la página 24 del RFP). Esto significa, a su vez, que cualquier propuesta que presente una forma, término, condición o especificación diferente a lo establecido en el RFP, **o inclusive diferente a lo clarificado en las respuestas ofrecidas en este documento**, será aceptada y sometida al proceso de evaluación. Reiteramos que el objetivo de realizar este proceso de competencia mediante el mecanismo de RFP, y no mediante subasta pública, es precisamente contar con la experiencia y el peritaje de las compañías participantes en el proceso de definir un modelo de servicio eficiente y efectivo.

I. Preguntas y Respuestas: FIRST TRANSIT OF PUERTO RICO

1. ***P. Las unidades que llevarían GPS, serían las rentadas o la totalidad de la Flota?***

   R. El Municipio prefiere que este servicio aplique al total de unidades que formen parte de la flota de vehicular, tanto las nuevas como las existentes. Aun así, sugerimos que en las propuestas que se presenten se pueda identificar el precio específico que corresponde al servicio de GPS, así como el precio específico que corresponde a cada uno de los servicios vehiculares mencionados en el RFP. De esta forma, el Municipio tendrá claridad de cuál será el efecto económico si finalmente se determina no seleccionar alguno de dichos servicios.

2. ***P. El servicio de monitoreo del sistema de rastreo (GPS), ¿será provisto o monitoreado por el contratista? ¿o por personal del Municipio? De ser el contratista el que provea el servicio de monitoreo, ¿qué horario de servicio se exigirá?***

   R. El servicio de monitoreo del sistema de rastreo (GPS) tiene que ser provisto por el contratista. El Representante Autorizado del Municipio deberá tener acceso a los informes que se produzcan a través del referido sistema. El sistema de rastreo (GPS) deberá estar en funcionamiento 24/7, de forma tal que la información que se grabe pueda ser consultada para propósitos de investigación, análisis de uso y toma de decisiones. Las compañías participantes deberán indicar o sugerir en sus propuestas por cuánto tiempo se conservará dicha información, haciendo un análisis comparativo entre la necesidad y/o utilidad de la data versus el costo de almacenar la misma. De otra parte, cada compañía deberá indicar en su propuesta la cantidad de horas/hombre que habrá de dedicar al proceso de monitoreo en vivo y al análisis de la información que se produzca a través del sistema GPS.

3. ***P. En la página 13 del RFP se indica que "el lavado exterior una vez a la semana que incluya, pero sin limitarse, al lavado de gomas, lavado de chasis, etc." ¿El lavado de la flota en su totalidad sería semanal? Si hablamos de 400 unidades a la semana, son aproximadamente 80 vehículos diarios. ¿O sería mensual? ¿O todo vehículo que se le realice PM en taller?***

   R. Analizamos el requerimiento del servicio de lavado a base de lo que plantea en su pregunta y nos percatamos que ciertamente requerir dicho servicio con una frecuencia semanal pudiera traer consigo complicaciones en las operaciones. Por tanto, por este medio redefinimos la especificación a que como mínimo se brinde este servicio cada vez que se realice el mantenimiento preventivo de cada unidad. De igual forma, sugerimos que en las propuestas se pueda identificar el precio específico que corresponde al servicio de lavado, así como el precio específico que corresponde a cada uno de los servicios vehiculares mencionados en el RFP. De esta forma, el Municipio tendrá claridad de cuál será el efecto económico si finalmente se determina no seleccionar alguno de dichos servicios.

4. ***P. Para el lavado de unidades, ¿el municipio va a proveer facilidades donde se va a realizar dicho lavado? ¿Las facilidades son existentes? ¿si existe, cumplen con el criterio ambiental y los estándares que se exigen para este tipo de área? ¿o se van a construir facilidades nuevas? ¿a quién le toca esa inversión, ya sea la construcción o las mejoras a las facilidades existentes?***

   R. El Municipio cuenta con facilidades para el lavado de las unidades. Si la compañía seleccionada, en su propuesta, contempla el uso de dichas facilidades municipales, será responsabilidad del Municipio realizar las mejoras y/o restablecer el tanque de retención de aguas usadas para asegurar que la operación cumpla con las regulaciones ambientales que aplican para este tipo de área.

5. ***P. En la página 9 del RFP, la número 27, solicita y cito: "reparación y reemplazo de cristales", como parte del mantenimiento y reparación normal de vehículo. Normalmente las roturas de cristales son a consecuencia de accidentes y normalmente se considera un gasto fuera del contrato ya que son accidentes ya que es un gasto impredecible. ¿En realidad ustedes desean que sea un gasto para considerar como parte del mantenimiento?***

   R. En caso de que un vehículo que sea propiedad del Municipio presente un cristal roto como consecuencia de un accidente, mal uso o abuso, será responsabilidad del Municipio el costo de reemplazo. Se espera que la compañía contratada se encargue de reemplazar el cristal.

6. ***En la página 7 del RFP, la número 2, sobre cambio de gomas, no especifica ¿si las gomas serán cambiadas por desgaste? ¿Ni la medida mínima a la que serán remplazadas ya sea 3/32, 4/32 o 5/32? ¿Debemos considerar que las gomas rotas por mal uso, accidentes o vandalismo se facturarán fuera del contrato?***

   R. Las gomas se remplazarán por la profundidad de sus huellas como parte del plan de mantenimiento preventivo. Será remplazada cada goma de cualquier vehículo cuando la medida sea 4/32 al centro, lado o por dentro. Como parte del contrato, también será reemplazada toda goma rota a consecuencia de las condiciones o riesgos de carretera, incluyendo las gomas de equipo pesado. No obstante, el costo de reemplazo de gomas rotas a consecuencia de vandalismo o accidentes entre vehículos lo asumirá el Municipio fuera de contrato.

II. Preguntas y Respuestas: TRANSPORTE SONNEL

1. ***P. Favor proveer especificaciones básicas o generales para los camiones que están solicitando para modelo de adquisición.***

   R. Ver anejos: A, B, C, D, E y F.

2. ***P. En el listado de los vehículos para adquisición hay un Camión 550 con Caja de Rescate, deseamos saber lo siguiente:***
   a) Tipo de tracción: 4x2 o 4x4
   b) Tipo de Cabina: Sencilla o Una y Media o Doble
   c) ¿El vehículo lo quieren sin body o con body?
   d) Si desean body, ¿lo desean con equipos o sin equipos? Si desean equipos deben especificarlos.

   R. Ver Anejo F.

3. ***P. En el listado de los vehículos para adquisición hay una pickup 350 con sky master de 35', deseamos lo siguiente:***
   a) ¿La unidad se va a montar en un service body o en una plataforma?
   b) ¿Si es una service body, será un contractor body (puertas laterales)?

   R. La unidad se va a montar en un "service body" con puertas laterales. Ver Anejo E.

4. ***P. Como parte de la reunión del pasado 6 de abril de 2021, hicimos una pregunta al Municipio y deseamos dejarla establecida para "récord". Se le preguntó sobre si era indispensable proveer la propuesta económica del mantenimiento y reparación en el formato que establece el RFP (por renglones con presupuestos anuales) o que si en cambio, se podía establecer una nueva estructura alterna sin tener que contestar el RFP en el formato solicitado. Municipio contesto que sí, que se podía proponer una nueva estructura de precio alterna y enfatizo que cada proponente tiene la libertad de proponer su estructura de precio a base de como proponen hacer el modelo de negocio sin tener que contestar en el formato solicitado en el RFP. Favor de confirmar si en efecto esto está correcto.***

R. Es correcto. En la página 24 del RFP se establece que el Municipio aceptará propuestas alternas que describan términos y condiciones diferentes a los expuestos en el documento de RFP y evaluará si las mismas tienen los méritos para satisfacer y cumplir con los servicios requeridos (según se estipuló en la página 24 del RFP). Cualquier propuesta que presente una forma, término, condición o especificación diferente a lo establecido en el RFP, o inclusive diferente a lo clarificado en las respuestas ofrecidas en este documento, será aceptada y sometida al proceso de evaluación. El objetivo de aceptar propuestas alternas es precisamente contar con la experiencia y el peritaje de las compañías participantes en el proceso de definir un modelo de servicio que satisfaga las necesidades del Municipio.

5. ***P. Para la reparación de equipos ya instalados en el taller que son propiedad del Municipio ¿quién será responsable del costo de reparación el Municipio o el Contratista? Favor aclarar.***

   R. En caso de que la compañía contratada opte por utilizar las herramientas o equipos que obran en el taller municipal, propiedad del Municipio, se espera que los costos de reparación de los mismos los asuma el contratista.

6. ***P. En el listado de los vehículos para adquisición hay unos que dicen Tómbola. Favor aclarar si se refieren a tómbola de los "rear loader" de basura o a un "mixer" de concreto.***

   R. Nos referimos a los "rear loader".

7. ***Solicitud de Información:***

   a) Especificaciones del equipo que el Municipio adquirió y que está en proceso de instalación en la estación de despacho de combustible.

      Ver Anejo G.

   b) Inventario de equipos y herramientas que obran en el taller municipal.

      Ver Anejo H.

   c) Modelo de declaración jurada de intereses no pecuniarios.

      Ver Anejo I.

III. Preguntas y Respuestas: CARIBBEAN FLEET SOLUTIONS

1. *Solicitud de Información*

a) Informe de los gastos de mantenimiento y reparación de la flota vehicular del Municipio durante los pasados tres (3) años.

Ver Anejo J.

Enviado hoy, 21 de abril de 2021, a las compañías cualificadas:

- Caribbean Fleet Solutions
- First Transit of Puerto Rico
- Transporte Sonnell

Víctor M. Coriano Reyes
Secretario de Administración y
Presidente de la Junta de Subastas
Municipio Autónomo de Caguas

Anejo A

Municipio Autónomo de Caguas

Especificaciones Mínimas Requeridas

Camión, 20 yds. de alta compactación doble tren

Año	Nuevo
Marca, Modelo, Color	Marca y modelo, especifique. Color Blanco.
Wheel Base	224”
Peso Bruto vehicular	56,000 lbs. de capacidad.
Motor	Diesel de 6 cilindros, 300 caballos de HP y de 860 lb. torque.
Rendimiento (millas x galón)	Según fabricante. Especifique.
Transmisión	Automática (*Allison*) con oil cooler. Especifique.
Eje delantero	Mínimo de 16,000 lbs. de capacidad con dirección hidráulica y *shock absorber*.
Eje trasero	Mínimo 40,000 lbs con ratio de 6.40.
Suspensión trasera	Mínimo 46,000 lbs. de capacidad con bushing con transverse torque rod.
Sistema de frenos	Completamente de aire con compresor de 15.5 cc mínimo *air dryer y drain valve*.
Chasis	Mínimo 120,000 lbs. PCI y *front tow hooks* de 4” *bumper* delantero cromado.
Gomas delanteras y traseras.	Siete (10) gomas, tamaño según fabricante de 12 lonas radiales.
Tanque de combustible.	Mínimo de 50 galones en aluminio pulido.
Sistema de Escape.	Vertical con ring cap. Especifique.
Cabina	Con asiento de aire para el conductor y tipo banco para dos (2) pasajeros.
Sistema de enfriamiento.	Con radiador de capacidad aumentada.
Sistema eléctrico.	Mínimo 12 voltios con alternador de 160 AMPR y dos (2) baterías de 1,950 CCA.
Aros	En aluminio pulido con sus centros.
Equipo adicional.	Gomas de repuesto igual a las que tiene la unidad. Gato de 20 toneladas mínimo. Llave de ruedas, radio AM / FM con aire acondicionado. Alarma de retroceso. Dos (2) banderines y un set de triángulos de tres (3). Extintor de 5 lbs. ABC y equipo de primeros auxilios instalado en la unidad. Debe tener un (1) biombo ámbar, LED tercera generación. Dos (2) luces de trabajo de 12 voltios. Reflectores traseros y delanteros instalados según leyes de Puerto Rico. Sellos de pesos, medidas y la tara colocada en pegatina en ambos lados. Registración y seguro compulsorio y ACCA. Manual de Operador y mantenimiento de la unidad.
Equipo especial	Caja de 20 yardas cubicas con *Hooper* de ¼ de espesor y de 3.2 yardas cubicas. Con una compactación de 1,000 lbs. x yardas cubicas, material en seco o mojado. Bomba hidráulica de no menos de 48 galones por minuto. Y botellas hidráulicas de no menos de 5 pulgadas. *Winche* hidráulico de no menos de 14,000 lbs. (*reeving cylinder winch*).

Anejo B

Municipio Autónomo de Caguas

Especificaciones Mínimas Requeridas

Camión compactador tómbola, 11 yardas

Año	Nuevo
Marca, Modelo, Color	Marca y modelo, especifique. Color Blanco.
Wheel Base	152”
Peso Bruto vehicular	31,000 lbs. de capacidad.
Motor	Diesel de 6 cilindros, 250 caballos de HP y de 660 lb. torque.
Rendimiento (millas x galón)	Según fabricante. Especifique.
Transmisión	Automática (*Allison*) de 5 velocidades con oil cooler.
Eje delantero	Mínimo de 10,000 lbs. de capacidad con *power steering dual M-80 / M-100*.
Eje trasero	Mínimo 21,000 lbs con ratio de 6.5.
Suspensión trasera	Mínimo 46,000 lbs. de capacidad con bushing de bronce.
Sistema de frenos	Completamente de aire con compresor de 13.2 cc mínimo *air dryer y drain valve*.
Chasis	Mínimo 80,000 lbs. PCI.
Gomas delanteras y traseras.	Siete (7) gomas, tamaño según fabricante de 12 lonas radiales.
Tanque de combustible.	Mínimo de 50 galones en aluminio pulido.
Sistema de Escape.	Según fabricante y regulaciones ambientales.
Embrague	Doble de 14”, cerámico.
Cabina	En acero anticorrosivo galvanizado 100% o aluminio con frente *fiberglass*. Guía de posiciones. Espejos 16” x 7” *bright finish.* Visera exterior aerodinámica. Asiento de conductor con suspensión de aire y tipo blanco para dos (2) pasajeros.
Sistema enfriamiento.	Con radiador de capacidad aumentada.
Sistema eléctrico.	Mínimo 12 voltios con alternador de 135 AMPR y dos (2) baterías de 1,950 CCA.
Aros	En aluminio pulido con sus centros.
Equipo Especial	Caja de 11 yds. Con *hooper* de 2.5 yds. Cubicas. Compactación con material seco o mojado de no menos de 1,000.00 libras por yarda cubica, botellas hidráulicas de no menos de 4 ½”. Bomba de no menor de 40 GPM con *wuinche* de botella hidráulica de no menos de 12,000 lbs.
Equipo adicional.	Gomas de repuesto igual a las que tiene la unidad. Gato de 20 toneladas mínimo. Llave de ruedas, radio AM / FM con aire acondicionado. Alarma de retroceso. Dos (2) banderines y un set de triángulos de tres (3). Extintor de 5 lbs. ABC y equipo de primeros auxilios instalado en la unidad. Debe tener un (1) biombo ámbar, LED tercera generación. Dos (2) luces de trabajo de 12 voltios. Reflectores traseros y delanteros instalados según leyes de Puerto Rico. Sellos de pesos, medidas y la tara colocada en pegatina en ambos lados. Registración y seguro compulsorio y ACCA. Manual de Operador y mantenimiento de la unidad.

Anejo C

Municipio Autónomo de Caguas

Especificaciones Mínimas Requeridas

Camión remolcador doble tren- Heavy Duty

Año	Nuevo
Marca, Modelo, Color	Marca y modelo, especifique. Color Blanco.
Wheel Base	175" minimo.
Peso Bruto vehicular	70,000 lbs. de capacidad.
Motor	Diesel de 6 cilindros, 500 HP, 15 litros mínimo.
Rendimiento (millas x galón)	Según fabricante. Especifique.
Transmisión	18 velocidades *heavy duty* con bomba de lubricación y *oil cooler*.
Eje delantero	Mínimo de 18,000 lbs. con suspensión de 18,000 mínimo *power steering dual.*
Eje trasero	Mínimo 52,000 lbs con ratio de 538 con bomba de lubricación / transverser torque rods.
Suspensión trasera	Mínimo 52,000 lbs. de capacidad con *bushing* de bronce.
Sistema de frenos	Completamente de aire con compresor de 16.5 cc, bandas delanteras de 16.5" x 6" bandas traseras de 16 ½ mínimo *air dryer y drain valve*.
Chasis	Reforzado, mínimo 120,000 lbs. con 3, 806,400 RBM equipado con ganchos de remolque, bumper delantero cromado.
Gomas delanteras y traseras.	10 gomas, según fabricante. Especifique.
Aros	En aluminio pulido con sus centros.
Tanque de combustible.	Mínimo de 100 galones en aluminio pulido.
Sistema de Escape.	Según fabricante y regulaciones ambientales.
Embrague	Doble de 15.5" heavy duty, cerámico.
Cabina	Con suspensión de aire, 80" de ancho mínimo con asiento de chofer con suspensión de aire, vicera exterior aerodinámica.
Sistema enfriamiento.	Con radiador de capacidad aumentada.
Sistema eléctrico.	Mínimo tres (3) baterías de 12 voltios cada una de 1900 CCA con alternador de 160 AMPR.
Equipo Especial	Quinta rueda con doble seguro heavy duty, rampla, tapalodos Chrome plate, luces reglamentarias, alarma de retroceso, conectores de aire y eléctrico con bomba hidráulica para distintas aplicaciones.
Equipo adicional.	Gomas de repuesto igual a las que tiene la unidad. Gato de 20 toneladas mínimo. Llave de ruedas, radio AM / FM con aire acondicionado. Alarma de retroceso. Dos (2) banderines y un set de triángulos de tres (3). Extintor de 5 lbs. ABC y equipo de primeros auxilios instalado en la unidad. Debe tener un (1) biombo ámbar, LED tercera generación 48" mínimo. Reflectores traseros y delanteros instalados según leyes de Puerto Rico. Sellos de pesos, medidas y la tara colocada en pegatina en ambos lados. Registración y seguro compulsorio y ACCA. Manual de Operador y mantenimiento de la unidad.

Anejo D

Municipio Autónomo de Caguas

Especificaciones Mínimas Requeridas

Camión tumba 5500 o similar, doble cabina de 4 a 5 yardas

Año	Nuevo
Marca, Modelo, Color	Marca y modelo, especifique. Color Blanco.
Wheel Base	No menor de 170.
Peso Bruto vehicular	19,000 lbs.
Motor	De gasolina de no menos de 5.9 litros y 390 HP con 750 libras de Torque.
Rendimiento (millas x galón)	Según fabricante. Especifique.
Transmisión	Automática con oíl cooling.
Suspensión trasera	Heavy Duty.
Sistema de frenos	Frenos anti-look en las cuatro ruedas.
Chasis	De no menos de 19,000 GVWR.
Gomas delanteras y traseras.	Según fabricante especifique.
Aros	En aluminio pulido con sus centros.
Tanque de combustible.	Según fabricante especifique.
Equipo adicional.	Equipo (kit) para cambio de neumático, manual del operador, extintor ABC 5 lbs., set de triángulos de (3) tres, (2) dos banderines y kit de primeros auxilios. Registración y ACCA. Sellos de pesas y medidas y TARA instalados en pegatina en ambos lados de la unidad.
Equipo especial.	Tumba de 4 a 5 yardas, con puerta de descarga trasera, piso de la tumba no menor de ¼ pulgada de espesor. Caja de herramienta y materiales con cerradura bajo área de carga. Toldo plegable automático. Pega de arrastre con bola de enganche de tres tamaños (2 5/16 , 2 pulgadas y 1 ½ pulgadas

Anejo E

Municipio Autónomo de Caguas

Especificaciones Mínimas Requeridas

Pick up 3500 o similar, doble cabina configuración Sky Master 35 pies

Año	Nuevo
Marca, Modelo, Color	Marca y modelo, especifique. Color Blanco.
Motor	De Gasolina de no menos de 5.9 litros y 385 HP con 750 libras de Torque.
Rendimiento (millas x galón)	Según fabricante. Especifique.
Transmisión	Automática con oíl cooling.
Suspensión trasera	Heavy Duty, con barra de torsión.
Sistema de frenos	Con anti look en las cuatro ruedas
Chasis	De no menos de 17,500 GVWR
Gomas delanteras y traseras.	Según fabricante especifique
Tanque de combustible.	Según fabricante especifique
Cabina	Doble cabina (Crew Cap)
Sistema enfriamiento.	Según fabricante especifique y con oil cooling en motor y trasmisión.
Sistema eléctrico.	Con alternador de no menos de 200amp
Aros	Según fabricante
Equipo Especial	Brazo Telescópico con alcance mínimo aproximado de 35 pies. Canasto sencillo, aislado lateralmente, con escalón de acceso al interior y con mecanismo de nivelación positiva automática. Capacidad mínima para el canasto de 350 lbs. Con *liner* para el canasto. El sistema de control del brazo será uno de control sencillo con cubierta removible de fácil acceso para mantenimiento. El factor mínimo de seguridad hidráulico estará conforme con las normas de ANSI A92.2. Deberá estar equipada con sistema de operación de emergencia de 12 v DC. Incluirá motor y bomba. Con barra estabilizadora. *Servicie Body* y protector de cabina, aislado categoría "C" 46 KV. Controles hidráulicos en canasto y pedestal. Dos luces de trabajo. Luces de seguridad en LED de tercera generación color ámbar. Acceso para utilizar herramientas hidráulicas de acople rápido en el puntal. Adiestramiento de uso y manejo del equipo incluyendo aspectos de seguridad. Debe incluir equipo de seguridad arnés y casco.
Equipo adicional.	Equipo (kit) para cambio de neumático, manual del operador, extintor ABC 5 lbs., set de triángulos de (3) tres, (2) dos banderines y kit de primeros auxilios. Registración y ACCA. Sellos de pesas y medidas y TARA instalados en pegatina en ambos lados de la unidad.

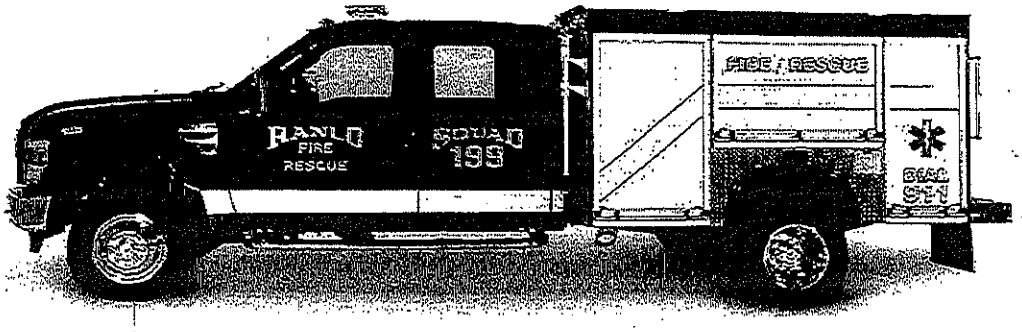

SCOPE AND GENERAL REQUIREMENTS

It is the intent of the manufacturer to provide a new fire apparatus that will withstand the continuous use encountered in the emergency fire fighting service. The apparatus shall be of the latest type, symmetrically proportioned and constructed with due consideration of the load to be sustained. All parts not specifically mentioned herein, but which are necessary in order to furnish a complete fire apparatus, shall be furnished and shall conform to the best practices known to the fire apparatus industry.

The unit is to be of current year manufacture, and is to be new and unused. The bid price shall not include any local, State, or Federal taxes. The Bidder shall not be liable for any State or Federally mandated tax or program after the sale of this apparatus.
These specifications shall be construed as minimum. Should the manufacturer's current published data or specifications exceed these, they shall be considered minimum and be furnished.

PRIME BIDDER, MANUFACTURER

The manufacturer shall be prime bidder and shall identify the location of their facility.

BIDDERS BACKGROUND

Bids are requested from responsible manufacturers who are engaged in the manufacture of fire apparatus. To insure reliable and complete acceptance of the apparatus, bidder shall have been in operation for a minimum of twenty (20) years in the manufacturing of fire apparatus.
The manufacturer of the apparatus must be fully owned and managed by a Parent Company, Corporation, or Individual(s) that is 100% held by United States of America based Company, Corporation, or United States citizen(s).

Proposals from any manufacturer that is fully or partially owned and/or operated by a foreign company, Corporation or Individual(s) under any type of ownership, partnership, or any similar type of agreement will be immediately rejected.

If the manufacturer of the apparatus, or if any owner, shareholder, or immediate relative of an owner or shareholder that has previously been involved in or held ownership in any company that has filed bankruptcy or any other type of reorganization plan, it must be clearly stated in the bid proposal. The statement must include details and dates of all occurrences.

FAMA COMPLIANCE

The apparatus manufacturer must be a current member of the Fire Apparatus Manufacturer's Association (FAMA) and must provide certificate of membership.

FAIR, ETHICAL AND LEGAL COMPETITION

In order to ensure fair, ethical, and legal competition the apparatus manufacturer shall have ever been fined or convicted of price fixing, bid rigging, or collusion in any domestic or international fire apparatus market.

PROPRIETARY PARTS

It is the intention of the purchaser for all bidders to furnish the apparatus with major parts commonly
used by the heavy-duty truck manufacturers and open market vendors where as replacement parts
are more readily available and at reduced cost. The use of proprietary parts may not be acceptable
to the purchaser.

MANUFACTURER'S DISCRETION

Materials, parts, or procedures used are subject to change at manufacturer's discretion at any time to
provide equal or better products.

COOPERATIVE PURCHASING

The manufacturer shall be pleased to allow other public agencies to use the purchase agreement
resulting from this invitation to bid unless the bidder expressly notes on the proposal form that prices
are not available for tag-on. The condition of such use by other agencies shall be that any such
agency must make and pursue contact, purchase order/contract, and all contractual remedies with
the successful bidder. Such tag-ons shall be done so that the purchaser has no responsibility for
performance by either the manufacturer or the agency using the contract.

PRODUCT QUALITY AND WORKMANSHIP

The components provided and workmanship performed shall be of the highest quality available
for this application. Special consideration shall be given to the following areas:

A). Accessibility to various components that require periodic maintenance or lubrication checks.
B). Ease of vehicle and pump operation.
C). Features beneficial to the intended operation of the apparatus.

Construction of the complete apparatus shall be designed to carry the loads intended to meet
the road and terrain conditions and speed requirements desired when specified by the purchaser.
Welding shall not be employed in the assembly of the apparatus in a manner that will prevent
the removal of any major component part for service and/or repair.

INSURANCE REQUIREMENTS

Each bidder must submit with their bid proposal a Certificate of Insurance listing the proposed manufacturer's product liability insurance coverage. Liability insurance shall be a minimum amount of ten (10) million dollars. Submitted certificate shall name the apparatus manufacturer, insurance company, policy number, and effective dates of the insurance policy. Bids submitted without the required certificate will be considered non responsive and automatically rejected. No exceptions are allowed to the minimum insurance coverage requirement.

The manufacturer shall maintain full insurance coverage on the purchaser's cab and chassis from time of first possession by the manufacturer until the apparatus is delivered and accepted by the purchaser (No Exceptions). Purchaser reserves the right to require proof of insurance from the manufacturer's insurance carrier prior to entering into a contract for the apparatus.

PAYMENT TERMS

Full payment for the apparatus shall be made at time of delivery of the completed vehicle. Final delivery price shall not include any Local, State or Federal taxes. The manufacturer shall not be liable for any State or Federal mandated tax or program after sale or delivery of the apparatus.

VEHICLE ACCEPTANCE AND DELIVERY

The customer shall pickup the vehicle at the manufacturing facility and shall supply evidence of sufficient insurance coverage to transport the vehicle.

FUEL TANK FILLED AT DELIVERY

The fuel tank and DEF tank (if applicable) shall be filled upon final delivery at the factory.

ONE YEAR APPARATUS WARRANTY

The complete apparatus detailed herein shall be warranted against defects in materials and workmanship for a period of twelve (12) months, effective upon pick up or delivery of the completed apparatus to the purchaser, as detailed in the respective warranty documents. Any unauthorized alterations or modifications to the apparatus shall void this warranty.

Other warrantees, as provided by individual component manufacturers may extend beyond this

warranty.

APPARATUS BODY WARRANTY, TEN YEAR

The apparatus body as detailed herein shall have a structural warranty against defects in materials and workmanship for a period of ten (10) years, effective upon final payment in full by the Purchaser, and pick up or delivery of the completed apparatus to the Purchaser. Any unauthorized alterations or modifications to the body shall void this warranty.

PAINT WARRANTY, FIVE YEAR

The finish paint as used on the proposed apparatus shall be warranted against defects in materials and workmanship for a prorated period of five (5) years, effective upon final payment in full by the Purchaser, and pick up or delivery of the completed apparatus to the Purchaser. Any unauthorized alterations or modifications to the apparatus shall void this warranty.

APPARATUS ELECTRICAL WARRANTY, TWO YEAR

The apparatus electrical system as detailed herein shall have a electrical warranty against defects in materials and workmanship for a period of two (2) years, effective upon final payment in full by the Purchaser, and pick up or delivery of the completed apparatus to the Purchaser. Any unauthorized alterations or modifications to the electrical system shall void this warranty.

APPARATUS DIMENSIONS

These are standard truck dimensions. Changes in configuration or additional options may affect these dimensions. The contract specification shall contain the exact dimensions.

OVERALL HEIGHT

The overall height shall be less than 96.00".

OVERALL LENGTH

The overall length shall be no longer than 26.00'.

OVERALL WIDTH

The overall width of the body shall be 96.00" wide; chassis mirrors will extend out past this width.

ANGLE OF APPROACH

The angle of approach for the apparatus shall not be less than eight (8) degrees as specified by the current edition of NFPA 1901/ 1906.

ANGLE OF DEPARTURE

The angle of departure for the apparatus shall not be less than eight (8) degrees as specified by the current edition of NFPA 1901/ 1906.

COMPLIANCE

The fire apparatus shall be built to the purchaser's requirements in compliance to all State, Local, and Federal highway safety requirements. The vehicle is not intended to meet any or all standards of the NFPA.

CAB SAFETY SIGNS

The following safety signs shall be provided in the cab:

- One (1) FAMA 10 sign shall be visible to the driver. "Flying Object Crash Hazard. All equipment required to be used in emergency response must be securely fastened. Loose items may injure or kill during a crash."

- One (1) FAMA 07 sign shall be visible from each seat. "Crash Hazard. Occupants must be seated and belted when vehicle is in motion. Use only OEM approved belts. Unbelted occupants

- One (1) FAMA 15 sign shall be visible from each seat. "Crash Hazard. Do not wear helmet while seated. Serious head or neck injury may result from helmet use in cab. Failure to comply may injureor kill."

- One (1) FAMA 17 sign shall be visible to the driver. "Backing Hazard. Ensure that personnel are clear before driving in reverse. Always use a spotter when backing. Failure to comply may injure or kill.

- One (1) FAMA 42 sign shall be inside of the driver door. "Sirens produce loud sounds that may damage hearing. Roll up windows. Wear hearing protection. Use only for emergency

response. Avoid exposure to siren sound outside of vehicle."

· "Do Not Move Apparatus When Light Is On" sign adjacent to the warning light indicating a hazard if the apparatus is moved (as described in subsequent section).

"NO RIDE" LABEL

A label shall be located on the vehicle at the rear step areas, and at any cross walkways, if they exist. The label(s) shall warn personnel that riding in or on these areas while the vehicle is in motion is prohibited.

COMMERCIAL CHASSIS SPECIFICATION

CHASSIS

W5H	F550 4X4 CRW CC	47K	FIRE/RES PREP
	179" WHEELBASE	67B	DUAL XTR HD ALT
Z1	OXFORD WHITE	512	SPARE TIRE/WHL2
A	VNYL 40/20/40	535	HI CAP TRLR TOW
S	MEDIUM EARTH GR	61J	JACK
660A	PREF EQUIP PKG	62R	TRANS PTO PROV
	.XL TRIM	65Z	AFT AXLE TANK
572	.AIR CONDITIONER	68M	PAYLD PLUS UPGR
	.AM/FM STER/CLK	942	DAY RUNNING LTS
99T	6.7L V8 DIESEL	98L	LO SULFUR NOCAP
44W	6-SPEED AUTO	18B	PLAT RUNNING BD
TGM	225 TRACTION		LESS TPMS
X8L	4.88 LTD SLIP		19500# GVWR PKG
90L	PWR EQUIP GROUP	213	ELECTRONIC SOF
	TELE TT MIR-PWR	41P	SKID PLATES

CAB ACCESS STEPS / RUNNING BOARDS

A pair of black running boards shall be supplied with the chassis.

FRONT MOUNTED WINCH

A WARN model M12000 electric winch with 12,000 pound (5,440 kg) rated line pull shall be installed in the brush guard. The winch shall be equipped with 125.00' of 3/8" diameter wire rope, clevis hook and a 4-way roller fairlead. The winch shall be operated through a 12.00' pendant with a hand held control. The winch shall include an automatic mechanical cone brake. It shall feature an easy to use free-spooling rotating ring gear clutch.
The installation shall maintain access to the winch controls.

GRILLE GUARD

A Warn model 98090 Trans4mer Gen II grille guard shall be provided and installed on the front of the chassis. The grille guard kit shall be provided with a black finish.

HEADLAMP GUARD

A Warn model 98095 Trans4mer Gen II headlamp guard kit shall be installed. The headlamp guard kit shall attach to the grille guard. The headlamp guard kit shall be provided with a black finish.

WINCH CARRIER - LARGE FRAME - BLACK FINISH

A Warn model 90110 large frame winch carrier shall be installed in grille guard. It shall be capable of carrying Warn winch models 16.5ti, M15, M12, and M8274-50.
The winch carrier shall have a powder coated black finish.

TIRE PRESSURE MONITORING

The apparatus shall be provided with tire pressure indicating valve stem caps. The indicators shall be installed on each tire and be a heavy duty design manufactured specifically for trucks. When tire is properly inflated, the indicator inside the cap shall be green, and when the tire is underinflated by 10%, the indicator inside the cap shall be red.

CHASSIS TOW HOOKS

The front tow hooks shall be provided as detailed in the chassis specifications.

REAR TOW PLATES

Two (2) rear tow plates with 1.50" I.D. holes, constructed with 1.00" steel plate shall be provided on the apparatus. These shall be located below the apparatus body and fastened to the rear chassis frame rails.

REAR MUD FLAPS

A pair of black rubber mud flaps, with the Manufacturer's logo, shall be provided and installed behind the rear wheels.

CENTER CONSOLE

A center console shall be furnished and shall be located between the driver and officer's seats. It shall house the siren, cup holders, and auxiliary equipment.

ROCKER SWITCH PANEL

A rocker type switch panel with a "Master Switch" and individual switches will be installed to provide the ability to de-activate individual lighting units, should the driver/officer require it. This panel will be lettered and lighted and conveniently mounted in the cab.

SWITCH PANEL LOCATION

The switch panel shall be located on the center console.

BATTERY SYSTEM

The battery system shall be supplied with the chassis.

MASTER BODY DISCONNECT SWITCH

A master body disconnect on/off switch shall be provided in the cab, near the driver's door. The switch shall disconnect the power to the apparatus body when the ignition switch is in the off position.

One (1) reset breaker shall be installed between the solenoid output and any electrical load. One (1) indicator light shall be provided to indicate the apparatus 12-volt system is on. The light shall be located in the chassis cab and be visible from the driver's positions. The light shall be green in color and labeled "Master Battery".

BATTERY CHARGER, BUILT-IN BATTERY SAVER

One (1) Kussmaul Auto Charge #1000 Series Model #091-215-12, 15 amp battery charger and 3 amp Battery Saver shall be installed. The charger shall include a Model #091-199-001 remote digital display.

The Auto Charge 1000 with Parasitic Load Compensation (PLC) is a compact, microprocessor controlled, completely automatic, single channel battery charger designed for vehicles with a singlebattery system. The PLC charger is designed to withstand the shock and vibration encountered by vehicle mounted equipment.

The Battery Saver component shall eliminate drain on vehicle's battery system when vehicle is not in use. The system shall automatically disconnect auxiliary vehicle loads from battery when the charger is energized. Parasitic Load Compensation feature is designed especially to meet the heavy duty requirements of emergency vehicles. Parasitic load compensation allows you to input the total number of parasitic load amps on the vehicle. Then the charger will shift the absorption stage set point so the battery voltage will drop to the float voltage when the desired current is reached. This will lead to a longer battery life and no overcharging or overheating.

The charger shall have the following operational specifications:
a) 120 volts AC input at 3.5 amps
b) Battery Charger: 12 volts DC output at 15 amps
c) Battery Saver: 3 amps 12 volt DC output
d) 8 Pin Selector Switch on front panel
a. Battery Type: Lead-Acid, Gel Cell, AGM or Odyssey
b. Float / 3-Step
c. Battery Saver ON/OFF
d. Parasitic Load Compensation
e) AC power applied light on front panel
f) System LED Status Indicator on front panel
g) Dimensions of: 9.35" high x 5.9" wide x 4.725" deep and weighs 11 lbs.

120 VOLT SHORELINE CONNECTION - "SUPER" AUTO EJECT

One (1) Kussmaul "Super" Auto Eject model 091-55-20-120, automatic, 120 volt, 20 amp shoreline disconnect shall be provided for the on board, 110 volt battery charging systems. The disconnect shall be equipped with a NEMA 5-20P female receptacle, which shall automatically eject the shoreline when the vehicle starter is energized. The mating connector shall be included with the auto eject and shall be provided as loose equipment.

BATTERY CHARGER DISPLAY/ COVER

One (1) Kussmaul model 091-55-234-YW universal single battery bank voltage display/ auto eject cover shall be supplied with the charger.
The cover shall be Yellow in color.

ELECTRICAL INLET LOCATION

An electrical inlet shall be installed near the wheel well, on the left hand side of the body.

SHORELINE POWER INLET PLATE

A shoreline power receptacle information plate shall be permanently affixed at or near the power inlet. The plate shall indicate the following:

- Type of Line Voltage
- Current Rating in Amps Power Inlet Type (DC or AC).

BACK-UP ALARM

One (1) 97 DB back up alarm shall be provided and installed at the rear of the unit. It shall be wired to activate when the transmission is placed in reverse.

APPARATUS BODY BODY DESIGN

The body shall be modular in design, allowing it to be removed and remounted on a new chassis.
The fabrication of the body shall be formed sheet metal. Formed components shall allow the Purchaser to have the body repaired locally in the case where any object has struck the body and caused damage. The use of proprietary extrusions will prevent the Purchaser from such repair and shall NOT be used.

BODY CONFIGURATION

The apparatus body shall have three (3) compartments on both sides, and a rear cargo area.
SUBFRAME

The body shall be attached to and supported by a heavy duty, spring loaded, aluminum subframe
u-bolted to the truck frame. The subframe shall be spring mounted to the chassis frame to allow for
independent flexing of the body in relation to the chassis frame.

BODY CONSTRUCTION

The body shall be fabricated using aluminum extrusions, angle, smooth aluminum sheet and aluminum treadplate providing a durable, corrosion resistant, and lightweight body.
The entire body shall be a welded into a one piece module, assembled and painted prior to mounting
on the chassis.

COMPARTMENT CONSTRUCTION

The compartments shall be constructed of .125" 5052-H32 Aluminum. Divider walls between compartments shall be of single wall construction with a minimum wall thickness of 0.125", with double 90 degree bends on the outside to form a channel. Compartment floors shall have aminimum of a 0.50" lip above bottom of the door opening, providing a sweep out design.
The rear compartment floor shall be constructed of .125" 3003-H22 Aluminum Tread Plate.
For adequate ventilation and air displacement, each compartment shall be properly louvered with square vents. The rearmost wall of the rear compartments, shall have full height removable panels, constructed of aluminum, to cover and protect all 12 volt electrical accessories mounted on the walls.
The panels shall be removable to provide access to those components.

FENDER PANELS

Side fender panels above the rear wheels shall be 0.125" 5052-H32 Aluminum.

SIDE BODY HEADER

On the upper area of the apparatus body, directly above the side compartment door openings, a header is to be fabricated from smooth, aluminum sheet. This area shall be painted the same color as the apparatus body.

FRONT BODY PROTECTION PANELS

Aluminum tread plate overlays and panels shall be installed on the front of the body compartment
from the lower edge to the top of the compartment doors.

WHEEL WELL PROTECTION PANELS

Aluminum tread plate overlays and panels shall be installed on the side fender panels, above the rear wheels.

REAR LOWER BODY PROTECTION PANEL

Aluminum tread plate overlays and panels shall be installed the full width of the body, in the area below rear compartment and above the tailboard.

COMPARTMENT TOP PROTECTION PANELS

Aluminum tread plate overlays and panels shall be installed the full length of the compartment tops.

BODY CONFIGURATION

The apparatus body shall be 108.00" long.

BODY WIDTH

The apparatus body shall be 93.00" wide.

BODY HEIGHT

The overall height of the apparatus body shall not exceed 64.00".
(The above overall height is for the body only, it does not include any upper hose trays or coffin boxes, if applicable to this specification.)

ROLL-UP DOORS

All lower compartment doors shall be equipped with AMDOR brand roll-up doors. The slats shall be 1.00" double wall aluminum with continuous ball and socket hinge joints designed to prevent water ingression and weather tight recessed dual durometer seals.

The interior door curtains shall be smooth to prevent equipment hang-ups. The door tracks and side frames shall each be one-piece aluminum. Each side seal shall be recessed, and non-marring with UV stabilizers to prevent warping.

The bottom panel flange shall have cut-outs for ease of access with gloved hands. The door strikers shall provide support beneath the lift bar to prevent door curtain bounce and potential false door ajar indications.

COMPARTMENT SHELF TRACKS – ALUMINUM

Heavy-duty aluminum Uni-Strut tracks shall be provided in the compartments as specified. The tracks shall not be welded to the apparatus body. The Uni-strut tracks shall allow the shelving to be positioned at any location in the compartment by simply loosening a bolt on each end of the shelf, pushing inward on the bolt, and sliding the shelf to the desired location.

COMPARTMENT SHELVING - SIDE COMPARTMENTS

Adjustable shelving shall be installed in the side compartments as identified later in this specification. Each shelf shall be made of 0.125" smooth aluminum with a 2.00" high perimeter retaining lip with welded corners.

LEFT SIDE COMPARTMENT IN FRONT OF REAR WHEELS, L1

There shall be a full height compartment located ahead of the rear wheels on the left side of the apparatus body. This compartment shall be designated as L1 within these specifications and any ensuing paperwork or drawings after contract execution.
- Dimensions: 34.75" wide x 57.625" high x 21.50" deep
- Door Opening: 28.25" wide x 53.125" high
- Usable Width: 34.75"
- Usable Depth: 19.50"

The compartment shall have a roll up door. The door shall have a satin finish.

COMPARTMENT LIGHT(S)

One (1) full height Luma Bar LED strip light(s) shall be installed inside the compartment. The compartment light(s) shall be controlled by a magnetic "On-Off" switch located on each compartment door.

ADJUSTABLE SHELVING TRACKS

There shall be vertically mounted uni-strut shelf trac for shelving installation.

ADJUSTABLE SHELF(S)

There shall be One (1) adjustable shelf constructed of 0.125" aluminum with a 2.00" upward bend at front and rear, and side supports.

LEFT SIDE ABOVE WHEEL COMPARTMENT, L2

There shall be a standard height compartment located above the rear wheels on the left side of the apparatus body. This compartment shall be designated as L2 within these specifications and any ensuing paperwork or drawings after contract execution.
- Dimensions: 47.00" wide x 27.625" high x 21.50" deep
- Door Opening: 44.50" wide x 23.125" high
- Usable Width: 47.00"
- Usable Depth: 19.50"

The compartment shall have a roll up door. The door shall have a satin finish.

COMPARTMENT LIGHT(S)

One (1) full height Luma Bar LED strip light(s) shall be installed inside the compartment. The compartment light(s) shall be controlled by a magnetic "On-Off" switch located on each compartment door.

ADJUSTABLE SHELVING TRACKS

There shall be vertically mounted uni-strut shelf trac for shelving installation.

ADJUSTABLE SHELF

There shall be One (1) adjustable shelf located in the compartment.

LEFT SIDE COMPARTMENT BEHIND REAR WHEELS, L3

There shall be a standard height compartment located above the rear wheels on the left side of the apparatus body. This compartment shall be designated as L3 within these specifications and any ensuing paperwork or drawings after contract execution.
- Dimensions: 26.25" wide x 57.625" high x 21.50" deep
- Door Opening: 19.75" wide x 53.125" high
- Usable Width: 23.50"

- Usable Depth: 19.50"
The compartment shall have a roll up door. The door shall have a satin finish.

COMPARTMENT LIGHT(S)

One (1) full height Luma Bar LED strip light(s) shall be installed inside the compartment. The compartment light(s) shall be controlled by a magnetic "On-Off" switch located on each compartment door.

ADJUSTABLE SHELVING TRACKS

There shall be vertically mounted uni-strut shelf trac for shelving installation.

ADJUSTABLE SHELF

There shall be One (1) adjustable shelf located in the compartment.

RIGHT SIDE COMPARTMENT IN FRONT OF REAR WHEELS, R1

There shall be a full height compartment located ahead of the rear wheels on the right side of the apparatus body. This compartment shall be designated as R1 within these specifications and any ensuing paperwork or drawings after contract execution.
- Dimensions: 34.75" wide x 57.625" high x 21.50" deep
- Door Opening: 28.25" wide x 53.125" high
- Usable Width: 34.75"
- Usable Depth: 19.50"

The compartment shall have a roll up door. The door shall have a satin finish.

COMPARTMENT LIGHT(S)

One (1) full height Luma Bar LED strip light(s) shall be installed inside the compartment. The compartment light(s) shall be controlled by a magnetic "On-Off" switch located on each compartment door.

ADJUSTABLE SHELVING TRACKS

There shall be vertically mounted uni-strut shelf trac for shelving installation.

ADJUSTABLE SHELF(S)

There shall be One (1) adjustable shelf constructed of 0.125" aluminum with a 2.00" upward bend atfront and rear, and side supports.

RIGHT SIDE ABOVE WHEEL COMPARTMENT, R2

There shall be a standard height compartment located above the rear wheels on the right side of the apparatus body. This compartment shall be designated as R2 within these specifications and any ensuing paperwork or drawings after contract execution.

- Dimensions: 47.00" wide x 27.625" high x 21.50" deep
- Door Opening: 44.50" wide x 23.125" high
- Usable Width: 47.00"
- Usable Depth: 19.50"

The compartment shall have a roll up door. The door shall have a satin finish.

COMPARTMENT LIGHT(S)

One (1) full height Luma Bar LED strip light(s) shall be installed inside the compartment. The compartment light(s) shall be controlled by a magnetic "On-Off" switch located on each compartment door.

ADJUSTABLE SHELVING TRACKS

There shall be vertically mounted uni-strut shelf trac for shelving installation.

ADJUSTABLE SHELF

There shall be One (1) adjustable shelf located in the compartment.

RIGHT SIDE COMPARTMENT BEHIND REAR WHEELS, R3

There shall be a standard height compartment located above the rear wheels on the right side of the apparatus body. This compartment shall be designated as R3 within these specifications and anyensuing paperwork or drawings after contract execution.

- Dimensions: 26.25" wide x 57.625" high x 21.50" deep
- Door Opening: 19.75" wide x 53.125" high

- Usable Width: 23.50"
- Usable Depth: 19.50"

The compartment shall have a roll up door. The door shall have a satin finish.

COMPARTMENT LIGHT(S)

One (1) full height Luma Bar LED strip light(s) shall be installed inside the compartment.

The compartment light(s) shall be controlled by a magnetic "On-Off" switch located on each compartment door.

ADJUSTABLE SHELVING TRACKS

There shall be vertically mounted uni-strut shelf trac for shelving installation.

ADJUSTABLE SHELF

There shall be One (1) adjustable shelf located in the compartment.

REAR BODY CONFIGURATION, ENCLOSED

The cargo area of the apparatus body shall be completely enclosed and covered with diamondplate aluminum.

REAR CENTER COMPARTMENT, CR1

There shall be one (1) compartment at the rear, approximately 50.00" wide x 43.00" tall x 96.00"deep.
The compartment shall have a roll up door. The door shall have a satin finish.

COMPARTMENT LIGHT(S)

One (1) full height Luma Bar LED strip light(s) shall be installed inside the compartment.
The compartment light(s) shall be controlled by a magnetic "On-Off" switch located on each compartment door.

EXTENDO-BED

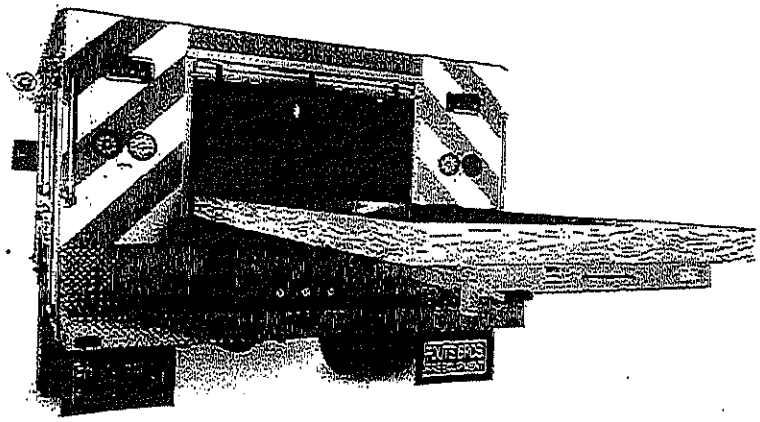

One (1) 1,500 lb. Extendo-Bed will be supplied and mounted in the rear compartment area of the body. The bed shall have a three-stage frame assembly design that shall allow the cargo frame to extend completely out of the vehicle. There shall be a lock assembly made up of a 0.75" diameter steel rod the length of the assembly. Lock points shall be located at just over 100% extension and at approximately each 12.00" of travel.

This allows the unit to be locked at various positions of travel for field work. A second pull handle shall be attached to the end of the Cargo Frame for ease of operation.
The platform will constructed of 0.75" acx plywood. Platform rails will be built of 2.00" by 0.125" steel angle. Unit will be painted with industrial black paint. Top of plywood deck will be coated with Bullet
sealer (Bully Liner).

FUEL FILL W/ ACCESS DOOR

One (1) Cast Products aluminum fuel fill with a hinged access door shall be installed in the left hand side wheel well rear of the axle. It shall be labeled "Ultra Low Sulfur Diesel Fuel Only".

DEISEL EXHAUST FLUID FILL

The deisel exhaust fluid fill shall be located in between the body and the chassis on the left hand side. It shall be labeled "Diesel Exhaust Fluid Only".

REAR TAILBOARD

A rear tailboard shall be provided and installed at the rear of the body. The rear tailboard shall be a minimum of 12.00" deep and constructed of aluminum Grip Strut. The outside edges of the rear tailboard shall be trimmed with bright diamond plate aluminum.
The tailboard shall meet the NFPA 1901/1906 recommended requirements for non-slip surfaces. The rear tailboard shall be the full width of the body.

EXTERIOR GRAB RAILS

Each grab rail shall be non-slip, 1.25" diameter extruded polished aluminum grab rails with rubber inserts designed to provide maximum gripping ability, strength, and durability. The rails shall comply with NFPA 1901.

GRAB RAILS, REAR STEP, VERTICAL

Two (2) extruded aluminum non-slip grab rails shall be provided and vertically mounted on the rear of the apparatus, one (1) on each side of the body.

HYDRAULIC HOSE REEL - ELECTRIC REWIND

Two (2) Hannay series #EF2020-17-18 electric rewind dual hydraulic hose reel, shall be provided on the apparatus.

MOUNTING

The reel(s) shall be mounted in a customer specified compartment.
There shall be one (1) hydraulic reel rewind switch installed and properly labeled. It shall be a weather-resistant momentary push button switch and shall be located near the hydraulic reel.

DUAL HYDRAULIC HOSE - TNT

100 feet of twin TNT hydraulic hose with 6' leads shall be supplied.

HOSE STOP

One (1) ball stop shall be attached to the electric cable to prevent total re-wind and to allow the hose to remain at a reachable position. The ball shall positively attach to the cable and be bright orange in color for high visibility.

12 VOLT ELECTRICAL SYSTEM

The truck shall have a 12-Volt electrical system. All wiring will be run in convoluted high temperature plastic loom. The wiring shall be color-coded, numbered, and function imprinted for permanent identification. All wiring devices shall be rated to carry 125% of the maximum ampere load for which the circuit is protected. All added electrical equipment shall be served by circuits separate and distinct from the chassis circuits. All solenoids, relays, and terminal blocks will be located in an easily accessible area. All circuits provided shall have properly rated low voltage over current protective devices. All electrical will be accordance with modern automotive wiring standards. All under side terminal junctions shall be fully enclosed in sealed plastic weather proof boxes.

ELECTRICAL SYSTEM (CHASSIS OEM)

The commercial chassis electrical system shall be furnished and installed by the chassis manufacturer and shall not be altered in any way so as to void or diminish the manufacturer's warranty responsibilities. Body builder wiring interface harnesses shall be specific to the chassis being utilized and the apparatus specifications with all such harnesses, circuits and connections being documented by the body builder and made part of the electrical schematics provided with the completed apparatus.

ELECTROMAGNETIC INTERFERENCE PROTECTION

The apparatus shall incorporate modern electrical system design, installation procedures, grounding techniques and wave generating components to provide the highest level of protection against electromagnetic (EMI) and radio wave frequency (RFI) interferences.
The apparatus shall be designed to operate and correctly function in congested municipal environments as well as industrial or concentrated commercial scenes without adverse effects from either EMI or RFI. Communications equipment installed after the apparatus is delivered shall be immediately tested by the installer for reception and transmission signal quality.

LOW VOLTAGE ALARM

One (1) Kussmaul 091-85-12 Low Voltage alarm system shall be supplied and installed with a Cole Hersee 4112-RC light/buzzer located in the cab. The system shall detect when the battery voltage drops below 11.8 volts and remains low for 120 seconds.

CHASSIS GROUND LIGHTS

LED ground lights with outward facing angle brackets shall be installed, one (1) under each chassis door.

FRONT OF BODY GROUND LIGHTS

Two (2) LED ground lights with outward facing angle brackets shall be installed under the front of the body. One (1) light shall be located on the left hand side and one (1) light located on the right hand side of the apparatus.

REAR STEP GROUND LIGHTS

Two (2) LED ground lights with outward facing angle brackets shall be installed under the rear step of the apparatus, one (1) each side.

GROUND LIGHT SWITCHING

The cab and body ground lights shall activate by engaging the parking brake.

HAZARD LIGHT

One (1) Whelen model 0SR00FCR flashing red LED light, located in the driving compartment, the light shall be illuminated automatically whenever any compartment door is ajar.
The hazard light shall be marked with a sign that reads "Do Not Move Apparatus When Light is On". The warning light shall be interlocked to the parking brake and shall only alert the driver when the parking brake is released. The light shall also be used to signal that other ancillary equipment such as racks light towers etc. are not in their "ready for transport" position.

LICENSE PLATE LIGHT

A license plate bracket with LED light shall be provided and installed on the rear of the body. It shall be wired to come on with the headlights.

BRAKE, TAIL, TURN LIGHTS

One (1) pair of flush-mount round 4.00" red LED combination brake/ tail/ turn lights shall be provided at the rear of the body, one (1) each side, outboard of the reverse lights. The lights shall be attached with a rubber grommet.

BACK UP LIGHTS

One (1) pair of flush-mount round 4.00" clear LED back up lights shall be provided at the rear of the body, one (1) each side, inboard of the B/T/T lights. The lights shall be attached with a rubber grommet.

MARKER LIGHTS

LED marker lights shall be installed on the vehicle in conformance to the Department of Transportation requirements. The side and rear of the body will be provided with reflectors. All marker lights shall be incorporated into the headlight circuit of the cab/chassis

LED TELESCOPIC BOTTOM RAISE FLOODLIGHTS

Two (2) Akron SceneStar LED model ELSS-XLDC telescopic lights shall be installed. The light pole shall be anodized aluminum and have a knurled twist lock mechanism to secure the extension pole in position. The extension pole shall rotate 360 degrees. The outer pole shall be a grooved aluminum extrusion and qualify as an NFPA compliant handrail. The pole mounting brackets shall have a 4" offset. Wiring shall extend from the pole bottom with a 4' retractile cord.

The lamphead shall have eight (8) ultra-bright white LEDs. It shall operate at 12 volts DC, draw 18 amps, and generate 19,000 lumens. The lamphead shall direct 50 percent of the light onto the action area while providing 50 percent to illuminate the working area. The light head shall tilt up and down with two heavy duty handles and shall be mounted with a swivel assembly. The lamphead shall incorporate heat-dissipating fins and be no more than 5.6" deep by 4 1/4" high by 14" wide. The lamphead and mounting arm shall be powder coated white. The floodlight shall be for fire service use.

An on/off switch with weatherproof boot shall be provided on the lighthead.
Location of lights shall be: One (1) on each side of the rear of the body

REAR VISION SYSTEM

One (1) complete backup camera system shall be provided. There shall be (1) camera located at the rear of the apparatus as close to the centerline as possible. The camera shall be capable of viewing the entire area not visible in the side view mirrors. The camera shall have a 7.00" color display mounted in view of the driver. The system shall include audio transmission from the camera.

The rear vision camera shall be wired to automatically activate when the chassis transmission is placed in reverse.

The monitor for the rear vision system shall be mounted in place of the rear view mirror.

NFPA AUDIBLE AND LIGHTING WARNING PACKAGE

The following warning light package shall include all of the minimum warning light and actuation requirements for the current revision of the NFPA 1901/ 1906. The lighting as specified shall meet the requirements for both "Clearing Right of Way" and "Blocking Right of Way" which includes disabling all white warning lights when the apparatus is in "Blocking Right of Way" mode.

LIGHTBAR

One (1) WHELEN model JE2NFPA 56.00" LED lightbar shall be supplied and mounted. The lightbar shall have clear lenses and contain the following modules:

Four (4) RED LIN6 LED modules, two (2) on each corner.
Four (4) RED CON3 LED modules, across the front
Two (2) WHITE CON3 LED modules, on the front
The forward facing white lights shall be automatically disabled for the "Blocking Right of Way" mode.

LIGHT BAR ACTUATION

The light bar shall be controlled by a switch in the cab.

LIGHTBAR MOUNTING BRACKET

The lightbar shall be mounted with the Whelen model MKEZ7 1.50" permanent mount.

LOWER FRONT WARNING LIGHTS

One (1) pair of Whelen model M7RC LED warning lights shall be installed, one (1) each side on the front of the chassis cab.
The lights shall be red in color with clear lens.
The light(s) shall be supplied and installed with a chrome bezel.

INTERSECTION WARNING LIGHTS

One (1) pair of Whelen model LINZ6 LED warning lights shall be installed, one (1) each side of the chassis cab front fenders. The lights shall be red in color with clear lens.There shall be black bezels supplied and installed on the lights.

LOWER MID-BODY WARNING LIGHTS

One (1) pair of Whelen model M7RC LED warning lights shall be installed, one (1) each side of the apparatus, mid-body. The lights shall be red in color with clear lens.
The light(s) shall be supplied and installed with a chrome bezel.

LOWER REAR WARNING LIGHTS

One (1) pair of Whelen model M7RC LED warning lights shall be installed, one (1) each side on the lower rear of the apparatus body . The lights shall be red in color with clear lens.
The light(s) shall be supplied and installed with a chrome bezel.

LOWER WARNING LIGHT ACTIVATION

The lights shall be controlled by a switch in the cab.

ELECTRIC SIREN AND CONTROL

One (1) Whelen model #295SLSA1 electronic siren shall be mounted in the cab. This unit shall feature an electronic air horn, wail, yelp, hi-lo and shall have a hard wired PA microphone.

ELECTRONIC SIREN SPEAKER

One (1) Cast Products Inc. model SA4306 100 watt cast aluminum speaker shall be installed. The speaker shall measure 7.46 inches tall X 7.57 inches wide X 3.06 inches deep. The speaker shall include a flat mounting flange which shall be polished aluminum. It shall be wired to the electric siren located in the cab. The speaker shall be mounted on the right hand side of the bumper.

120/240 VOLT ELECTRICAL EQUIPMENT INSTALLATION

All 120/240 electrical equipment shall be installed by the apparatus manufacturer. This shall include any item related to the system, including, but not limited to the following:

- Generator
- All scenelighting accessories.

- All outlets,and cord reels (where applicable)
- Breaker panel.

GENERATOR

There shall be a Honda EM6500SK2 electric start gas powered, 120/240 volt generator installed on the
apparatus. The generator shall have an intermittent rating of 5000 Watts and a continuous rating of 4500 watts. The engine shall be a Honda overhead valve design, 4 stroke, single cylinder which shall be air cooled. The generator engine shall have an electric starter with recoil backup. The generator engine shall be rated at 11.7 horse power.
The generator shall come with it's own fuel tank with a capacity of 6.2 US gallons. No fuel pump shall be required. The system shall be gravity fed, as designed by Honda; requiring no special maintenance or fuel pump replacements. There shall be a remote start for the Honda generator.The generator engine shall have an electric starter that is connected to the chassis batteries. The generator electric starter shall have a quick disconnect battery plug installed.

GENERATOR MOUNTING

The generator shall be mounted at the front wall of the rear compartment. The exhaust shall be extended up through the roof of the body. A weather cap shall be installed to protect it from the weather.
120/240V RECEPTACLES

110 OUTLETS

Three (3) 110-volt outlets with weatherproof covers shall be mounted on the apparatus in the following locations:

One (1) driver side over the wheel well
One (1) passenger side over the wheel well
One (1) on the rear of the unit

PAINT, STRIPING, AND LETTERING SECTION BODY PAINT PROCESS

All bright metal fittings, if unavailable in stainless steel shall be heavily chrome plated. Iron fittings shall be copper plated prior to chrome plating. All seams shall be caulked both inside and along the exterior edges with a urethane automotive sealant to prevent moisture from entering between any body panel.The body and all parts shall be thoroughly washed with a grease cutting solvent (PPG DX330) prior to any sanding. After the body has been sanded and

the weld marks and minor imperfections are filled and sanded, the body shall be washed again with (PPG DX330) to remove any contaminants on the surface.

The first coating to be applied is a pre-treat self etching primer (PPG DX1787) (.5 to 1.0 dry film build) for maximum adhesion to the body material. The next two to four coats (depending on need) shall be an acrylic urethane primer surfacer (PPG K36). The film build shall be 4-6 mils when dry. The primer surfacer coat, after appropriate dry time, shall be sanded with 320-600 grit sandpaper to ensure maximum gloss of the paint. The last step is the application of at least three coats of PPG Delfeet polyurethane two-component color (single stage). The film build being 2-3 mils dry. The single stage polyurethane, when mixed F3270 catalyst (PPG F3260) shall provide a UV barrier to prevent fading and chalking.
All products and technicians are certified by PPG every two (2) years.

CHASSIS PAINT

The chassis shall be painted by the OEM Chassis Manufacturer.

PRIMING

All surfaces to be painted shall be primed with three (3) parts PPG F3993 Primer mixed with one (1)PPG F3996 Primer Harnder , and a half (.5) part PPG Thinner F3320.
Two (2) applications of primer shall be applied. The first application shall be four (4) coats and the second application shall be three (3) coats. A final application of sealer shall be applied using Primer Filler.

PAINT FINISH

The body shall be painted with a PPG Delfleet Evolution Paint System.
As part of the curing process the painted body shall go through a baking process. The painted components shall be baked at 185 degrees for 3 hours to achieve a complete coating cure on the finished product.
After bake and ample cool down time, the coated surface shall be sanded using 3M 1000, 1200, and or 1500 grit sandpaper to remove surface defects. In the final step, the surface shall be buffed with 3M Super-duty compound to add extra shine to coated surface. No more than .5 mil shall be removed in this process. All products and technicians shall be certified by PPG every two (2) years.

SIDE COMPARTMENT FINISH, ZOLATONE

The apparatus side compartment interiors are to be coated with Zolatone, a polychromatic, modified nitrocellulose coating with a flat background color with accenting fleck colors. The compartments shall be cleaned with a grease remover, and then the surface sanded and prepared for painting. The Zolatone finish is washed and waxed like paint, and is resistant to man solvents and wear.

PAINT COLOR

The apparatus body paint shall be "cross referenced" from the chassis paint, and shall be painted to match the main chassis color as close as possible.

REFLECTIVE STRIPING

Reflective striping shall be applied to the perimeter of the truck. Size and design shall be determined by the department.

CHEVRON STRIPING

At least 50% of the rear of the unit shall be covered with Red and Yellow alternating 6" stripe in an inverted Chevron pattern.

LETTERING

Reflective lettering per municipality Specs.
Photos or drawings of the lettering and striping layout shall be provided by the purchaser prior to construction.

	TOTAL (NO TAX, MUNICIPAL PLATES AND REGISTRATION INCLUDED)	**$ 163,000.00**

Note: Shelving and hydraulic hose reels included as requested

CLAUDIO RIVERA

FLEET SPECIALIST

JOSEPH BOUZA

FLEET MANAGER

Gasboy TopKAT PLUS Bid Specification

1.0 General Requirements

System manufacturer must have a minimum of ten (10) years' experience in the design and manufacture of fuel management equipment.

The proposed system must conform to ISO 9001:2000 standards for quality management systems. System shall be UL and cUL approved.

The system must be expandable for future expansions in the number of: fuel sites, vehicles, and drivers.

System shall be Gasboy TopKAT PLUS system or approved equal

2.0 Fueling Procedure

The system shall allow manual fueling.
In manual fueling, a contactless Mifare tag or Mifare card and/or Magnetic stripe card and a keypad for manual entry shall be available as alternative methods for initiating a fueling transaction.
A two stage authorization process shall be provided by identifying both the vehicle and the driver prior to refueling. Both driver and vehicles IDs should be stored in the transaction. The two stage authorization process should be flexible enough to link the vehicle device either to a specific driver or to a list of drivers.

3.0 System Description

3.1 System Configuration

The **site controller** shall be a stand-alone unit comprising all required peripherals including the central processing unit, display panel, two hose mechanical or eight hose electronic pump control module, communication modules, and optional Receipt Printer.
The site controller shall be web enabled to allow independent real-time control, monitoring and reporting via the web using user ID with password and SSL protected link (https://).
The site controller shall communicate with a central high performance server or dedicated host PC computer for the purpose of centralized control and monitoring of multiple sites.

Refueling shall take place regardless of the connectivity to the host computer. Refueling limits and restrictions shall be 'pushed' from the host computer to all fuel site controllers enabling off-line refueling with limits and restrictions also when communication is not available. A time limit should be provided for off-line activity to block possible 'break' of the limits by refueling in several sites through the off-line mode.

4.0 Site Controller – TopKAT PLUS

4.1 General

The site controller shall control up to 2 mechanical hoses or, if programmed, 8 electronic Gasboy 9800 Series hoses in one terminal.

The site controller shall store up to 25,000 transactions and 50,000 vehicles/devices with the ability to set limitations and restrictions.
The site controller shall be available for refueling 24/7.
Site controller shall work in online and off-line modes, in case of communication failures with the FHO software. When communication is established again, the system shall synchronize data automatically.
The site controller shall have an embedded hardware platform designed to survive the harsh unattended fueling environment.

The site controller shall use a solid state Flash disk and RTC (Real Time Clock) with back up, along with surge suppressors for transient and noise immunity.
The system shall include a power fail recovery mechanism.
The CPU shall have no edge connectors and no hard disk (no moving parts)

The site controller shall have a high level data protection through two separate isolated TCP/IP Ethernet network ports. One port shall be used for site peripherals interface and the second port for external communication to the network (Remote access, host computer and 3rd party systems) protected by SSL security. The outside link could use a local modem connection through PPP protocol for TCP/IP communication, cellular, or dial-in type modems.
The site controller shall have the following additional capabilities:

- Secured remote capabilities for monitoring, management and maintenance activities
- Flexible with all types of communication including TCP/IP, wireless Ethernet bridge modems, satellite communications, and dial-up analog modem.
- Web enabled reporting and alarms for Tank Level Sensing (TLS) systems (Veeder Root-350 and VR-450 protocols). TCP/IP interface to TLS only.
- Fuel management software for reconciliation reports
- Accessible via Internet browser to control and monitor the system. No requirement to install dedicated software.
- Real time web-based dynamic graphical monitoring and control of dispensers
- Remotely open a pump and limit the quantity to a specific transaction
- Able to update fuel price at a specific time
- Remote maintenance, remote troubleshoot and remote software upgrades of the various components of the system

The following physical, electrical and environmental specifications shall be provided:

- Supply voltage: 110– 240 VAC
- Power consumption: 2A max.
- Operating temperature: -30 C to +70 C
- Communication interface: RS-485–9600 bps, Half-Duplex, RS-232, Ethernet RJ-45-10 Mbps, EIA 802.15.4

4.2 Tank Level Sensing (TLS) Interface

The site controller shall support Veeder Root TLS 350 and Veeder Root TLS 450 protocols
The TLS will be connected to the site controller via TCP/IP communication port only to allow fuel management capabilities. RS 232 interface will not be supported
The site controller shall have the possibility to define the following communication parameters; Baud rate, Parity, Data bit, Stop bit, Flow control

The site controller shall collect the following data from TLS equipment:

- 12:00 midnight shift inventory volume for tanks
- Tank inventory level ; CSLD (Leak Detection) status – Pass/Fail
- Fuel delivery information; Water Level
- Water levels, Temperature, Alarms (Leak, Overfill, Sump, Sensor, etc)
- Alarms shall flash continuously on the main screen and could be sent via email

4.3 The Pedestal and Dispenser/Pump mount for the TopKAT PLUS

The pedestal shall be a slim (9.5"x9.5"x61") powder coated metal designed for easy installation and service. The paint application for the entire pedestal terminal shall consist of a positive/negative charged ionization process for superior bonding. All materials shall be tested to sustain Oil, Fuel, Sun, Water and Salt.

The hardware configuration options for the TopKAT PLUS shall be as follows:

1) 9800 Electronic Series Gasboy dispenser/pump mounted TopKAT PLUS
2) 9800 Electronic Series Gasboy pedestal mounted TopKAT PLUS
3) 9800 Electronic Series Gasboy dispenser/pump mounted TopKAT Plus with Receipt Printer
4) 9800 Series Electronic Series Gasboy pedestal mounted TopKAT PLUS with Receipt Printer
5) Mechanical (2-hose control only) Pedestal mounted TopKAT PLUS
6) Mechanical (2-hose control only) Pedestal mounted TopKAT PLUS with Receipt Printer

An Electronic dispenser/pump from other Manufacturers other than Gasboy can only be interfaced to the TopKAT PLUS with a pulse output interface and shall be programmed as mechanical hose outlets (2-hose control only)

The pedestal display panel shall consist of:

- Top illumination utilizing an array of high intensity blue LED's
- 5" wide x 1.6" high display window
- 4 lines, 20 characters (1/4" height) each, or optional graphic LCD
- LCD operates well in all lightening conditions
- 16 functional keys. The keys shall be rugged and made of metal for higher reliability and longer life (flexible plastic key caps will not be acceptable).
- The key's sensors shall use **piezoelectric technology** for highest reliability
- Magnetic Card Reader
- Mifare Card/Tag Reader

4.4 Receipt Printer (optional)

Optional outdoor receipt printer with 500 ft. paper roll including automatic paper cutter and alarms indicating low-paper and paper-out (alarms shall be available via email and displayed online with secured access). Receipt Printer door shall be able to be opened with a Manager's Mifare tag for paper change and test transactions.

4.5 Site Controller Software

The system shall be based on web server technology and enable easy secured (SSL) remote access through the network using a standard PC with an internet browser, without the need for any other software application.

The browser interface shall allow control and monitoring, maintenance activities, report generation with advanced filters and templates, graphical monitoring of fuel levels, on-line pump monitoring and more.
The system shall provide flexibility when searching for data within the system without the need for prior knowledge in SQL or other query languages.
The site controller shall support mechanical and electronic dispensers. All links shall be protected and isolated for maximum reliability.

The system shall store transaction data as well as driver and vehicle records into its database using FLASH disk. Other critical data such as fueling limits and restrictions shall also be stored in the database.

The system shall use the following authorization devices:

- Mifare cards or tags
- Magnetic Cards (ABA track 2 and 3)
- Keyboard entry authorization
- Two stage authorization using a combination of Mifare/Mag card/Keypad
  Authorization schemes shall include the following scenarios:
  - Single device authorization
  - Two stage authorization (based on two authorization devices)
  - Add-on keyboard entries: PIN code, vehicle ID, odometer reading, engine hours

The system shall have the option to collect data from driver before refueling, such as: PIN, Odometer, vehicle ID, etc.
The system shall provide odometer reasonability checks
The site controller shall allow the possibility to work offline with all limits and restrictions

System shall have the option to approve or decline refueling according to pre-defined limits and restrictions for the specific unit. Such limitations shall include:

- Limit of daily, weekly and monthly refueling volume or sales amount.
- Enable or disable vehicle refueling on specific days (weekdays for example) and/or specific time slots within a day (night time for example)
- Limit the maximum refueling sessions for a specific vehicle per day, week or month.
- Block specific stations for a specific vehicle (if vehicle is restricted for operation in a specific zone).
- Restriction of specific fuel types for refueling of a specific vehicle.

5.0 Host Software

5.1 General

The software shall support multiple fuel site controllers and allow data consolidation.
The software shall support multiple fleets and multiple departments.
The software shall synchronize data with all sites.
The software shall be used as a centralized issuing and programming facility for Magnetic cards, Mifare cards, and Mifare tags.
The software shall be installed on the host computer running Windows operating system and SQL database that supports ODBC connectivity.

The system shall be a centralized web server communicating with all sites to provide centralized data base and on-line network access for fleet managers, key personnel and remote maintenance entities.
The software shall communicate with all sites to provide 24/7 on-line access through the network.
The software shall create and control several fleets and departments and support different privilege levels for limited access for different users (for example, a specific Fleet manager shall only be able to manage only his fleet vehicles).
The software shall provide advanced on-line services for multiple sites and multiple fleets in a region.
The host software web interface shall use SSL security.
The software shall provide secure log-in through the Web for each fleet manager, for monitoring & control and report generation including exception reports.
The host software application can interface to other applications via Web Services, import and export of files to FTP and ODBC standard.
The software shall allow Exporting data to different file formats (using a dropdown menu) such as CSV, TXT, and XML.
The user interface for all software components shall be a web browser.
Mifare tags, Mifare cards and Magnetic cards shall be defined and associated with unique numbers to the fleet vehicles.

6.0 Limits and Restrictions

Host software shall allow limits and restrictions to be configured either by an authorized user or imported from a different external system (using the import/export).
The rules shall be transferred to every site controller to enable off-line activity in case of communication failure; hence a fuel site will be able to refuel a vehicle within its set of limits and restrictions, when communication is down.
The limits shall be 'pushed' into the site controller at a predefined time or for a predefined period of time. Site controllers can also use the limits in an off-line mode (in case of communication failure).
There shall be a graceful period of time (parametric) for this off-line mode since the vehicle could refuel also in other sites (above its limits) while the sites are disconnected from the host computer.
Customizable vehicle and driver limits and restrictions shall include:

- Limit of daily, weekly and monthly refueling volume in gallons as well as in currency.
- Enable or disable vehicle refueling on specific days (weekdays for example) and / or specific time slots within a day (night time for example)
- Limit the maximum refueling sessions for a specific vehicle per transaction, per day, week or month.
- Limit the maximum refueling sessions for a specific vehicle per transaction, per day, week or month.
- Block specific stations for a specific vehicle (if vehicle is restricted for operation in a specific zone).
- Block specific stations for a specific vehicle (if vehicle is restricted for operation in a specific zone).
- Restriction of specific fuel types for refueling of a specific vehicle

7.0 Fuel Management System Software

The host computer shall collect the transactions and TLS information from all fuel sites for centralized fuel management activities including required deliveries, forecasting, reconciliation and more for optimal usage of fuel.
The system shall provide the following capabilities:

- Reports regarding fuel consumption with filters of sites, dates, volumes and more
- Customized templates for specific reports
- History of fuel consumption from every product with graphical representation
- Forecasting consumption for every product based on the consumption history with graphical representation
- Reconciliation

- Manual entry or editing of fueling transactions
- Provide unified view of ALL stations with regards to fuel level status
- Provide consolidated view of each specific fuel tank, per station
- Provide a centralized system for maintenance reporting and reporting of different system alarms, per station
- Provide an interface for managing of manual stations (without Fuel Controllers)

Tanks status screen from TLS system per site with graphical representation of the tanks
Alarms (High/Low tanks level, Leak detection, No communication, Etc.)
Export capabilities to other systems (ERP)

8.0 Reporting System

Consolidate data from multiple stations and generate reports, including exception reports, reconciliation reports, trends, forecast, consumption, tank capacity and more. There shall be two types of Reports:

- Custom Reports
- Fuel Management System Reports (built-in)

Custom Reports

The software shall provide a highly flexible custom reporting utility. Data elements can be selected and put in any order by the user to create their own custom report.
This report shall have the ability to be saved as a template for later use.

Must have advanced customized reporting capabilities with filters and templates (Web based).
The custom reports feature shall enable report generation of transactions performed in the fuel station in various profiles.

The following field names shall be used to generate custom reports tables:
Station, Date, Time, Fleet, Transaction Type, Vehicle #, Product, Quantity, Total Sale, Receipt No., Fleet Code, Pay Mode, Transaction Id, Authorized By, Department, PPV, Odometer, Engine Hour, Pump, Tank, Nozzle, Density, Temperature, Vehicle Type, Ref/Slip No., Driver name, Dept. code, Card number, Device name.

The custom report shall allow summary by the following fields (Break by):
Date, Plate, Pump, Product, Pay Mode, Station name, Fleet code, Authorized by, driver name, Dept. code, or a selection of any of the above fields

The custom reports shall allow sorting by the following fields (Sort by):
Date & Time (Ascending/Descending), Pump, Transaction ID, Product, Amount (Ascending/Descending), Quantity, Plate, Pay mode, Station name, fleet code, Receipt ID, Driver name, Dept. code or a selection of any of the above fields.

The above powerful capabilities shall allow flexible reporting such as:
Summary Report – summarizing all transactions of a specific fleet of vehicles.
Vehicle Report – offering the Fleet Manager a detailed transaction report of vehicles pertaining to his fleet, in three cross sections:

> **Transactions** - providing information regarding each transaction, including the vehicles license plate number, odometer reading, engine hours, fuel type, fuel volume and the transaction ID.

Consumption - listing information regarding each vehicle (device) providing a summation of data (volume consumption, fuel cost, other costs) for each vehicle in a specified time frame.

Exception Reports
The software shall provide Exception Reports for the Fleet Manager. It must provide the ability to spot any abnormal incidents that occurred within his fleet. The following exception reports are required for each fleet:
Volume Exception Report – shall list noted exceptions relating to the fuel volume consumed in the transactions compared with the related vehicle's fuel tank volume.
Mileage Exception Report – shall list the exceptions related to the elapsed distance of the vehicles, according to odometer readings.
Consumption Exception Report – shall list the exceptions related to the fuel consumption of the vehicles, according to odometer readings and the specified fuel consumption ratio of the vehicle.
Mileage Exception Report – shall list the exceptions related to the elapsed distance of the vehicles, according to odometer readings.
Consumption Exception Report – shall list the exceptions related to the fuel consumption of the vehicles, according to odometer readings and the specified fuel consumption ratio of the vehicle.
Mileage Exception Report – shall list the exceptions related to the elapsed distance of the vehicles, according to odometer readings.
Consumption Exception Report – shall list the exceptions related to the fuel consumption of the vehicles, according to odometer readings and the specified fuel consumption ratio of the vehicle.
Not Used Exception Report – shall list the vehicles which did not carry out any transaction in a specified time frame. The report should include the license plate number, the odometer reading and the date and time of the last transaction performed by the vehicle.

b) Fuel Management System Reports (Built-in)

Sales
Sales by Tanks Report
Local Account Transactions
Pump-wise Delivery Report
Product-wise Dispenser Delivery
Fuel Sales Trends Graph
Fuel Volume Forecast Report

Stock Data Reports
Tanks by Sites
Tanks Trends Graph
Total Wet Stock Report

Maintenance Reports
Exception Log Reports
Alarm Duration Reports

Reconciliation Report
Shift Report
Environmental Report
Tank Reconciliation Trends

9.0 Back-up

The system shall provide several back-up mechanisms for maximal data protection as follows:
The database is transmitted periodically to a remote server. The backup can be for the entire database or differential.
Built-in data base back-up mechanism (Customer FTP).
All transactions are exported to a Customer FTP site through an Export Module.
RAID mechanism at the host computer

10.0 Warranty

- 12 month system Parts and Labor warranty
- 5 year warranty for the Mifare Tags

The simplicity you want.
The precision you demand.

TopKAT PLUS

TopKAT PLUS proves that sophistication can be simple. Order your Gasboy dispenser with TopKAT PLUS installed, and it goes to work; identifying every driver, monitoring every transaction, tracking every detail. No separate mounting base, no dedicated power lines. Just a steady stream of data that maximizes efficiency and keeps you in control.

TopKAT PLUS demands little, but delivers a lot. It enables you to create a wide variety of customized restrictions, it delivers sophisticated reports, and it integrates seamlessly with your automatic tank gauge system. It can even deliver data to you anywhere in the world over the Internet.

Track costs more precisely with a seamless connection to Gasboy Fleet Head Office.

Collect data without slowing down your operation with support for multiple access technologies, including Web-based and contactless systems.

Stay up and running 24-7 with lighted terminals and secured access for unattended sites.

Are you ready to see what the simple sophistication of TopKAT PLUS could do for you? Talk to your sales rep or visit **www.gasboy.com** to learn more.

Hardware

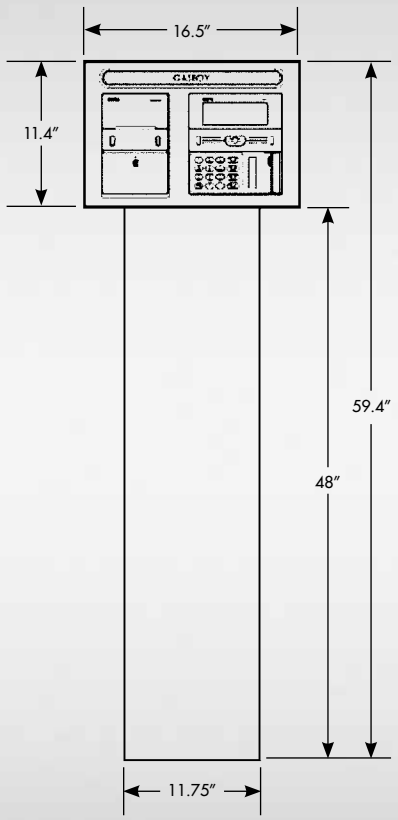

Dimensions are in inches.

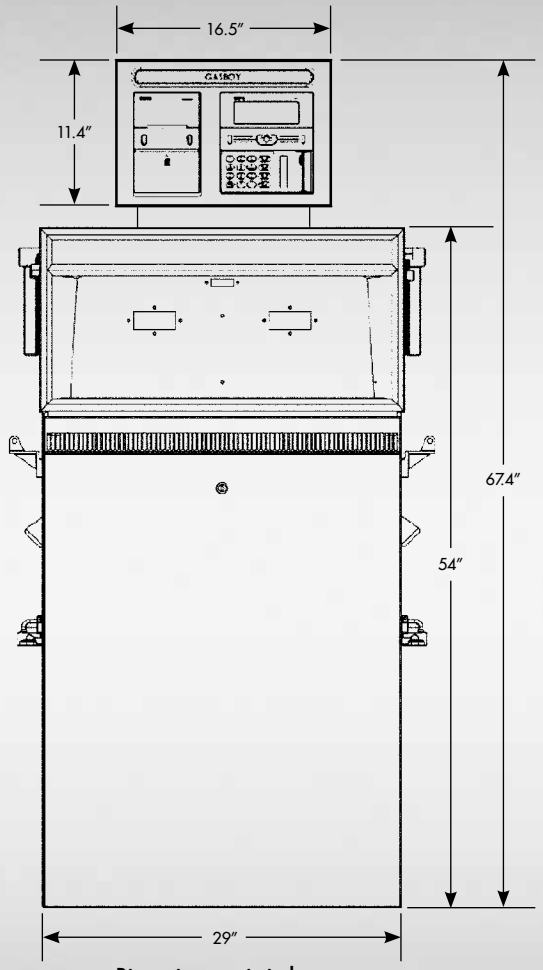

Dimensions are in inches.

Data Entry Options/Access Control

Piezoelectric keypad, magnetic card reader, and mifare card/tag reader. Available optional ruggedized thermal printer for printout of purchase receipts.

Dispenser Connection Options

TopKAT PLUS can control up to two electronic hoses as a factory installed dispenser mount. As a pedestal mount, it can control up to two mechanical hoses or up to eight Gasboy RS-485 electronic dispenser hoses.

Communication Options

Supports a wide variety of communication links: cellular, dial-in modem, VPN, satellite, ADSL and more.

Central Controller

Embedded hardware platform designed to survive the harsh fueling environment. TopKAT PLUS runs on an embedded operating system and uses a solid state Flash disk and RTC (Real Time Clock) with backup, along with surge suppressors for transient and noise immunity. Power fail recovery mechanisms are included.

Additional Hardware Features

- Weatherproof enclosure to survive the harsh environment of a Home Base Station
- Secured remote capabilities for monitoring, management and maintenance activities
- Ethernet interface to Automatic Tank Gauge systems using the Veeder-Root Serial Interface Command Protocol
- Advanced electronic support of mechanical dispensers, enabling totalized, preset and price updates

Software

Remote Web Access
Monitor, manage and maintain the TopKAT PLUS from anywhere. Web Access makes remote and secure management possible. No special management software is necessary. All you need is a standard PC with Internet. The technology is already integrated into the station controller.

Head Office
Fleet Head Office consolidates the data from multiple sites, centralizes management and generates reports, including exception reports. It also enables control of the limits and restrictions placed on the various fleet vehicles. And authorized fleet personnel are able to log-in remotely so they have the ability to control and manage wet stock inventory on all stations including orders, deliveries and reports.

Restrictions and Limits
We make it easy to control a fleet's fuel expenses. By defining limits (day, week, month), maximum number of refueling (day, week, month) and setting restrictions (days of the week, fuel type, stations, time intervals), you can maximize profitability. And when you have multiple sites, the centralized Fleet Head Office can synchronize data so that the limits can be applied to all of your sites. Even in the case of communication failure, a site will be able to refuel for a predefined grace period (parameter) using the most recent limits stored in its database.

System Reports

The TopKAT PLUS application provides a highly flexible report utility for producing a wide range of data reports. So fleet managers and head office managers can review fueling transactions from different aspects and ascertain balance between sales and buys, fleet expenses, vehicle performance and more.

Two different types of reports are available:

Custom Reports
Enable the user to generate reports performed in the location by the following profiles:

> **Transactions:** Sums up transaction details in order and broken down by the selected field
> **Products:** Sums up all data in the report by product, containing total transactions amount and quantity sold
> **Payment Mode:** Sums up all data by payment whether Customer, Credit or Cash depending on the application settings

Export Reports
Enable the user to generate and export records of the transactions performed in the location by the following parameters:

> **Date range**
> **Transactions:** Differentiate by field name, format, width and precision
> **From last export**

Users can transfer the report in CSV, text or XML. They can set the delimiter, the decimal point notation and column names. The format column enables users to define specific formats, such as: date and time, left justification and zero padding for numbers. The reports can run manually or automatically. If they run automatically, the storage location is either FTP or Local Directory.

Real Time Fueling

Real Time Tank Level

Real Time Reporting

THE FOLLOWING PHYSICAL, ELECTRICAL AND ENVIRONMENTAL SPECIFICATIONS ARE APPLICABLE TO THE TOPKAT PLUS:

Name	TopKAT PLUS
Supply voltage	120/240VAC
Power consumption	1A max
Operating temperature	-40 °F to +104 °F (-40°C to +40 °C)
Storage temperature	-40 °F to +158 °F (-40°C to +70 °C)
Humidity	80% Non-condensing
Dimensions	16.55"W x 11.39"H x 20.47"D (420.4 x 289.4 x 520 mm)
Communication interface	RS-485 – 9600 bps, Half-Duplex RS-232 Ethernet RJ-45 – 10 Mbps
Pump control maximum current (2 Solid State Relay Channels)	Motor maximum: ¾ HP at 115 VAC or 1½ HP at 230 VAC Factory installed – switches motor relays
Power supply output voltage to Pulser unit	12 VDC +/- 20%
Power supply maximum output current	30 mA max
Pulser input high level voltage	9 to 15 VDC
Pulser input high level sink current (@15V)	3 mA
In use "on" level (Input)	100 – 240 VAC, 50/60 Hz, 2 W (20 mA)
In use "off" level (Input)	0 to 20 VAC

*Download full bid & spec on **www.gasboy.com**.*

View TopKAT PLUS video demo.

P-7077 | Printed in the U.S.A. | © 2012 | 05125 | 7300 W. Friendly Ave., Greensboro, NC 27410 (336) 547-5000

GASBOY

Atlas® pumps & dispensers for fleet operations

Choose from the industry's leading range of pump and dispenser models, with features and options designed specifically to meet the unique needs of fleet operators.

The Gasboy® Atlas series is rugged, durable, reliable and perfectly suited for the tough fleet fueling environment. Electronic and mechanical choices are lit for unattended applications. High flow, Super High Flow, and Ultra High models provide fast fueling for large vehicles. Satellite dispensers allow simultaneous fueling of saddle tanks to reduce fueling time.

Gasboy Atlas pumps and dispensers are compatible with a full range of Gasboy Fleet Management Systems to help you track and manage your fleet better. From the most simple system to the most comprehensive one, Gasboy offers turnkey solutions to simplify your operation.

Mechanical pumps and dispensers

Super High Flow (up to 40 gpm/151 lpm)*

Model Number	Type	Hoses	Products	Motors	Meters
9140K	Pump	Single	1	(2) 1 hp c.d.	(2) Gilbarco CFT
9140KX	Dispenser	Single	1	n/a	(2) Gilbarco CFT

High Flow (up to 22 gpm/83 lpm)*

Model Number	Type	Hoses	Products	Motors	Meters
9153K	Pump	Single	1	(1) 1 hp c.d.	Gilbarco CFT
9152KTW1	Pump	Twin	1	(1) 1 hp c.d.	Gilbarco CFT
9153KTW1M	Pump	Twin	1	(2) 1 hp c.d.	Gilbarco CFT
9153KTW2	Pump	Twin	2	(2) 1 hp c.d.	Gilbarco CFT
9153KX	Dispenser	Single	1	n/a	Gilbarco CFT
9153KXTW1	Dispenser	Twin	1	n/a	Gilbarco CFT
9153KXTW2	Dispenser	Twin	2	n/a	Gilbarco CFT

Quality makes the difference.

Nobody understands the tough fleet fueling environment better than Gasboy. That's why our Atlas pumps and dispensers are tough by design. We use the highest quality materials and craftmanship to bring you the best equipment you can buy.

- Brightly lit brand area and display.
- Improved flow-through meter increases reliability.
- Vane type pumping unit does not require special priming procedure.
- Heavy duty 13-guage, galvanized frame and lower panels.
- Fully removable door for easier access and service with plenty of room to work.
- Removable side and top sheathing black or customer specified color, or stainless steel side and top panels.
- Customizable graphic options on lower door

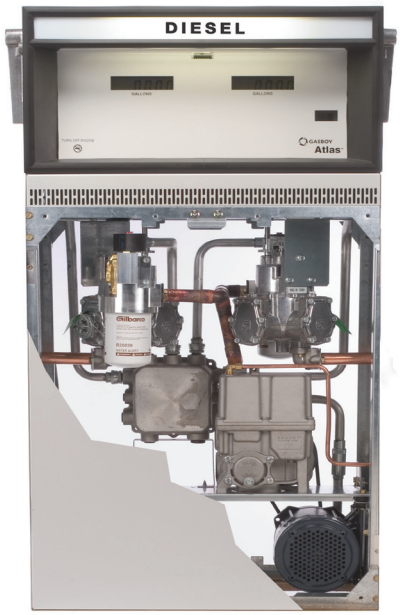

Ultra High Flow (up to 50 gpm/189 lpm)*

Model Number	Type	Hoses	Products	Motors	Meters
9850K	Pump	Single	1	(1) 1-1/2 hp c.d.	Liquid Controls
9850KTW3	Pump	Combo	1	(1) 1-1/2 hp c.d.	Liquid Controls
9850KX	Dispenser	Single	1	n/a	Liquid Controls
9850KXTW1	Dispenser	Twin	1	n/a	Liquid Controls
9850KXTW2	Dispenser	Twin	2	n/a	Liquid Controls

Super High Flow (up to 40 gpm/151 lpm)*

Model Number	Type	Hoses	Products	Motors	Meters
9840K	Pump	Single	1	(2) 1 hp c.d.	(2) Gilbarco CFT
9840KX	Dispenser	Single	1	n/a	(2) Gilbarco CFT

High Flow (up to 22 gpm/83 lpm)*

Model Number	Type	Hoses	Products	Motors	Meters
9853K	Pump	Single	1	(1) 1 hp c.d.	Gilbarco CFT
9852KTW1	Pump	Twin	1	(1) 1 hp c.d.	Gilbarco CFT
9853KTW1M	Pump	Twin	1	(2) 1 hp c.d.	Gilbarco CFT
9853KTW2	Pump	Twin	2	(2) 1 hp c.d.	Gilbarco CFT
9853KX	Dispenser	Single	1	n/a	Gilbarco CFT
9853KXTW1	Dispenser	Twin	1	n/a	Gilbarco CFT

Electronic pumps and dispensers

Model Number	Works With	Hoses	Products	GPM(LPM)*	Motors	Meters
215Q	9153KX 9853KX	Single	1	Up to 21	n/a	n/a
215Q-Z		Single	1	Up to 21	n/a	n/a
215QTW-Z		Twin	1	Up to 21	n/a	n/a
216Q	9850KX 9840KX 9140KX	Single	1	Up to 40	n/a	n/a
216Q-Z		Single	1	Up to 40	na/	n/a
216QTW-Z		Twin	1	Up to 40	n/a	n/a

Satellite dispensers

Atlas™ Features Option Summary

Feature	Description	9853	9840	9850	9820	9153	9140	9120	215/216Q
Approvals	cUL and UL listed, NCWM, Measurement Canada	S	S	S	S	S	S	S	S
Working Pressure	50 psi maximum	S	S	S	S	S	S	S	S
Unit of Measure	Gallons (liters optional)	S	S	S	S	S	S	S	S
Motor/Voltages	1 HP continuous duty motor 115V/60HZ – (230V/50HZ is optional)	S	S		S	S	S	S	
	1-1/2 HP continuous duty motor 115V/60HZ – (230V/50HZ is optional)			S					
	3/4 HP continuous duty motor 380V/50HZ/3-Phase	O	O		O	O	O	O	
Pumps	10 vane rotary pump with integrated air separator	S	S		S	S	S	S	
	High speed rotary vane pump with integrated air separator			S					
Solenoid Valve	1″ or 1-1/2″ solenoid valve for slow-down preset operation (PP)	1″	1-1/2″	1-1/2″	1″	1″	1-1/2″	1″	
Filters	Integrated internal spin-on filter (F) – external spin-on type optional on all models	S	S		S	S	S	S	
Discharge	1″ or 1-1/4″ NPT black iron	1″	1-1/4″	1-1/4″	1″	1″	1-1/4″	1″	1″- 215 1-1/4″- 216
Satellite Piping	Dispensers only (S)	O	O	O		O	O		
Inlet	1-1/2″ or 2″ NPT inlet	1-1/2″	2″	2″	1-1/2″	1-1/2″	2″	1-1/2″	1-1/2″
Housing	Painted G90 galvanized steel	13 GA	13 GA	13 GA	11 GA	13 GA	13 GA	11 GA	12 GA
Panels	Lockable removable panels - painted 20 gauge or 16 gauge G60	20	20	20	16	20	20	16	16
	Lockable removable panels - Stainless steel 22 gauge Kooline	O	O	O		O	O		
	Lockable removable panels - Stainless steel 20 gauge Type 304								O
Sheathing	Painted replacable sheathing - G60 galvanized	22	22	22	16	22	22	16	16
	All panels stainless steel Type 304 – stainless steel - Kooline (optional)	22	22	22		22	22		20
Computer/Register	Electronic Register: Volume only display. Electronic totalizer displayed on LCD by magnetic switch.	S	S	S					
	Mechanical Register: VR10 - Volume only, includes integrated totalizer and power reset					S	S		
	Mechanical Register: Four-wheel gallons/liters only, displays up to 999.9. Includes 7-digit totalizer and power reset							S	
Electronic Display	Volume only front display. 1″ backlighted LCD. Maximum 999.000 gallons or 9999.00 liters.	S	S	S	S				
Interface Options	Pulser: (10.1 or 100.1 volume) for key or card systems (CC or CX)					O	O	O	
	Card System Interface: RS-485 interface for direct connection to Gasboy CFN System, Islander, or TopKAT	O	O	O	O				
	Card System Interface - pulse output: selectable pulse/gallon outputs for interfacing with fuel control systems.	O	O	O	O				
	DC conduit and junction box (D)	S	S	S					
	Keytrol (EK)					O	O		
Brand Panel Lighting	Lighted brand panel (L)	O	O	O		O	O		
Totalizers	Non-settable Electro-Mechanical	O	O	O					
	Non-settable Mechanical				O			S	
Nozzle Positions	Side Mount	S	S	S		S	S		S
	Front Mount	O	O	O	S			S	O
Hose Retractors	Internal hose retractor (I)	O	O			O	O		
	High hose retractor: post-mounted retractor with enclosed spring return reel.	O	O	O	O	O	O	O	O
AST Applications	Pressure Regulating Valve Model 52A (9048577) – suction pumps only	O			O	O		O	
	9850 Above Ground Tank Kit – suction pumps only			O					
Warranty	Parts and labor - 12 month	S	S	S	S	S	S	S	S
	Parts and labor - 24 month	O	O	O	O	O	O	O	O
Miscellaneous	ATC (Canada only)	O	O	O					
	Hand crank (K)					O	O		
	Battery backup	O	O	O					
	Vapor Recovery: Balanced vapor recovery system	O			O	O		O	O
	Vapor Recovery: Healy Universal Kit compatible	O				O			
	Hose: 3/4″ or 1″ standard or Vapor Recovery (specify length)	O	O	O	O	O	O	O	O
	Automatic nozzles, breakaway valves, and swivels	O	O	O	O	O	O	O	O

S = Standard, O = Optional

P-7067A | Printed in the U.S.A. | © 2009 | 0109.5 | 7300 W. Friendly Ave., Greensboro, NC 27410 (336) 547-5700

TLS4i TLS4C

VEEDER-ROOT

Every tank tells a story

Every day, you spend valuable time checking inventory levels for ordering fuel or verifying correct delivery amounts. If you are manually sticking your tanks, you are not getting the full story.

Do not lose inventory, productivity, or customer loyalty by relying on incorrect manual monitoring.

The ***TLS4i/TLS4C*** automatic tank gauge systems are easy to navigate solutions that affordably streamline your wet stock management.

Proven Profit | **Proven Protection** | **Proven Precision** | **Proven Partner**

Proven Profit

The compact and powerful ***TLS4i/TLS4C*** monitoring systems are perfect solutions for inventory visibility. View, configure, and control using the Graphic User Interface (GUI), or remotely via web-enabled, to improve efficiency and save money. Standard features include:

Wet Stock Management

- *Improve accuracy over manual reconciliation methods.*
- *Eliminate stick readout error.*
- *Eliminate data transcription error.*
- *Avoid manual reconciliation variance caused by temperature, delivery shortages, tank tilt, stick inaccuracy, and leaks.*

Productivity Improvements

- ***Color Touch Screen*** *– easy, clear navigation quickly points to crucial information which allows operators to focus on customers.*
- ***Custom Alarms*** *– preprogrammed alarm alerts provide scenario-specific information to predetermined individuals to increase efficiency.*
- ***Customized Home Screen and Favorites*** *– ease-of-use saves operator response time.*

- ***Faster Problem Resolution*** *– remote troubleshooting and diagnosis prevents unnecessary dispatch and more efficient service calls.*
- ***Customer Satisfaction*** *– eliminates manual tank dipping so station managers have more time to work with customers.*

Proven Protection

The Veeder-Root ***TLS4i/TLS4C*** monitoring systems use sensors, probes and advanced software solutions to deliver accurate wet stock and forecourt information, that protects your fuel assets whether you are on-site or with your family.

- ***Web-Enabled Remote Connectivity*** – *anytime, anywhere access via web-enabled devices to monitor site performance, providing peace-of-mind by delivering real-time alerts, compliance reports and variance analysis.*

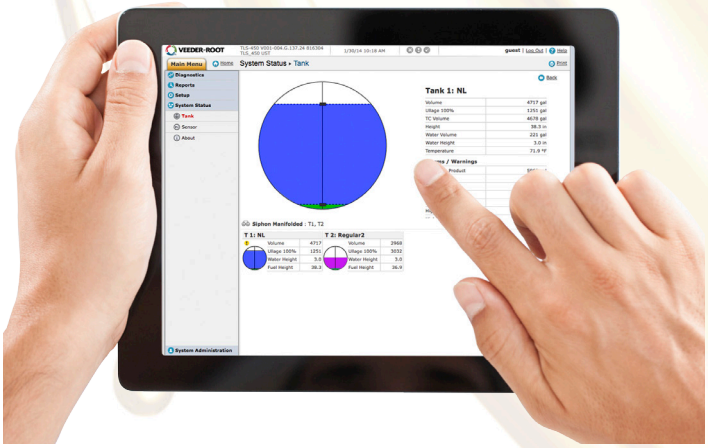

- ***Data Protection*** – *store up to 3 years of data and protect it from power outages, battery replacements or software upgrades.*
- ***Reduced Risks*** – *eliminates manual tank dipping, reducing exposure to harmful fumes and minimizing forecourt access.*
- ***Customized User Access*** – *user-configurable login enables deployment of company specific security controls and procedures.*
- ***Timed Sudden Loss Detection*** – *monitor changes in inventory due to theft during quiet periods via programmable scheduling.*

Proven Precision

The ***TLS4i/TLS4C*** automatic tank gauges are affordable wet stock management solutions that deliver accurate, crucial information, including:

- ***Temperature Compensated Volume*** – *sophisticated algorithms compensate for the impact of temperature on product volume, delivering a precise inventory picture.*
- ***Advanced Sensor Technology*** – *compatible with existing Veeder-Root sensors and probes.*
- ***Standard Delivery Report*** – *provides real-time details of delivery start and end times, temperature, volume, height, and water.*
- ***Smart Communication*** – *for notifications of pre-programmed events by email or fax.*
- ***Inventory Level*** – *real-time access to inventory levels anytime, anywhere.*
- ***Graphical User Interface*** – *designed with features for ease of use including workflow wizard, context sensitive help and user-defined favorites.*

TLS4i: Max 4 probes, Max 12 total inputs	
Application Software:	
333578-001	TLS4i application software
Hardware:	
860199-120	TLS4i console, UL/cUL with touch screen
860199-110	TLS4i console, UL/cUL without touch screen
TLS4C: Max 2 probes, Max 6 total inputs	
Application Software:	
333577-001	TLS4c application software
Hardware:	
860199-020	TLS4c console, UL/cUL with touch screen
860199-010	TLS4c console, UL/cUL without touch screen
Optional Software	
333410-006	Continuous Statistical Leak Detection (CSLD)
333410-015	Statistical Leak Detection (SLD)
333410-018	Timed Sudden Loss Detection

Proven Partner

Founded nearly a century ago, Veeder-Root is the global leader of automatic tank gauges, backed by an unmatched service network. Around the globe, more than half a million petroleum marketers and commercial fueling businesses enjoy increased **profits** and **protection** of their **fuel assets** with Veeder-Root's solutions.

Our proven company history, combined with the highest precision levels in our wet stock management tools, delivers results that matter and the protection your business deserves.

Contact Us

125 Powder Forest Drive
PO Box 2003
Simsbury, CT 06070

1.888.561.7942
www.veeder.com

 576047-217 REV B

Anejo H

Tool Inventory List

Location Name: **Caguas**

Location Code: **4128**

Asset / Seria Number	Model Number	Description	Quantity	Condition	Location
E970528	FP-12	Lifter, 12,000 Lbs. with roler Jack	1	Good	
E970530	FP-12	Lifter, 12,000 Lbs. with roler Jack	1	Good	
3431	240012AR	Lifter, 12,000 Lbs. with roler Jack	1	Good	
500001234	LR-50	Lifter, 6,000 Lbs. (Bed for Tires)	1	Good	
3012	FP-15	Lifter, 1,000 Lbs. for Motorcycle	1	Good	
L2/16/2009-00027	CI103120HX	Air Compresor 120 Gal.	1	Good	
L2/9/2008-00025	CI103120HX	Air Compresor 120 Gal.	1	Good	
510308287	Coast 1050	Wheel Balancer	1	Good	
306407477	Coast Hit 5000	Tire Instaler	1	Good	
903104329	5040	Rim Clamp	1	Good	
	1,000 Gls.	Used Oil Tank	1	Good	
	500 Gls.	Oil Tank	2	Good	
	Dispach oil Pumps	Lincon Dispatch Oil Pump	2	Good	
	Mobile	Used Oil Dispenser	3	Good	
	Hand Truck	Drums Hand Truck	1	Good	
	Tire Protector	Tire Cage	1	Good	
	10 Tons.	Jack Stand	1	Good	
	5655	Air Floor Jack 22 Tons.	1	Good	
	5 Tons.	Floor Jack	1	Good	
	Floor Stand	Tire Holder	1	Good	
	20S-HRSA-ABC	Fire Extinguisher	2	Good	
		Work Bench	1	Good	

Tool Inventory List

Location Name: **Caguas**

Location Code: **4128**

L1175TQ	RT/CM	Electric Hoist 3 Tons.	1	Good	
		Utility Work Bench	1	Good	
4010389	L62701	Parts Washer	1	Good	
		Bench Press	2	Good	
A904	Z04-867	Air Grease Dispenser	2	Good	
		Spill Kit	1	Good	
		Transmision Jack	1	Good	
		Floor Jack 20 Tons	1	Good	
		Floor Jack 5 Tons.	2	Good	
		Jacks Stands 10 Tons	7	Good	
		Jacks Stands 6 Tons	11	Good	
		Llave de Perro 48"	1	Good	
		Hammer 18 Lbs	1	Good	
		Extinguishers	4	Good	
	Bradly	Eye Washer	1	Good	
	20 Ton	Hyd Press	1	Good	
		Work Benche	3	Good	
81-24725	HP-3A	Engine Stand	1	Good	
		Steel Stepper	1	Good	
		Used Oil Station	1	Good	

Tool Inventory List

Location Name: **Caguas**

Location Code: **4128**

		Floor Jack 5 Tons	1	Good	
		Jack Stand 6 Tons	5	Good	
		Jack Stand 3 Tons	1	Good	
		Used Bateries Stand	1	Good	
		Tire Rack	1	Good	
11-1035-IE	S511	Maquina de alinear	1	Damage	
		Floor Jack 3 Tons	2	Good	
		Motorcycle Floor Jack	2	Good	
		Vertical Transmision Jack	1	Good	
		Extention Lather 24'	1	Good	
		Lather 6'	1	Good	
		Steel Stepper	1	Good	
	Panasonic	Lap Top (Scanner)	1	Good	
		Used Oil Station	1	Good	
		Air Hoses	4	Good	
		Floor Jack 3 Tons	1	Good	

Tool Inventory List

Location Name: **Caguas**

Location Code: **4128**

U1060505836	ARC-550	Portable Welding Machine	1	Good	
	AC-225	Lincon Weldeng Machine	1	Good	
	252	Welding Machine Miler	1	Good	
10639562	GC3004-4MGH	Power Washer	1	Good	
04-09012-020	33000-98	Oil Analisys Tester	1	Damage	
		Tire Racks 8'	12	Good	
		Filter Crusher	1	Good	
		Air Floor 20 Tons.	1	Good	
		Engine Stand	2	Good	
		Portable Soldering Station (Acetileno)	1	Good	
	Schumaker	Bateries Charger	1	Good	
		Hand Truck	1	Good	
		A/C Recovery Gas Station	1	Good	
		Stepper	2	Good	
	Dewalk	Shaw Saw	1	Good	
		Come Alone	1	Good	
		Helmet	2	Good	
		Puller Camisillas de Motor	1	Good	
		Wrench 15/16	1	Good	
	R134	A/C Manometros	1	Good	
		Nevera de Oficina	1	Good	
	Makita	Grinder	1	Good	
	Craftman	Drill	1	Good	
	Pro Alert	A/C Leak Detector	1	Good	
	True Point	A/C Leak Detector	1	Good	
		Dremel	1	Good	
		A/C Suption Pump	1	Good	

	Atco	Hose Crimper	1	Good	
RCE26404977	Genesis	Scanner Genesis	1	Good	
	Autel	Scanner AUTEL	1	Good	
		Scanner TPMS	1	Good	
		Coil Spring Compresor	1	Good	
		Socket 2 1/2	1	Good	
	Vulcan	Socket 2" Vulcan	1	Good	
	Snap On	Socket 1 1/2"	1	Good	
	SK	Socket 2 1/4"	1	Good	
		Fumigadora para desinfectar	1	Good	
	Milwake	Baterie Impact Wrench 1/2 with Charger	1	Good	
		Elect Extention Cord 50'	2	Good	

Anejo I

DECLARACIÓN JURADA

Yo, _____, mayor de edad, soltero(a)/casado(a), identificación núm. _____, de profesión _____ y vecino(a) de _____, Puerto Rico; bajo juramento, declaro lo siguiente:

1. Que mi nombre y demás circunstancias personales son las anteriormente expresadas.

2. Que soy el Principal Ejecutivo o Representante Autorizado de la empresa *(nombre de la compañía)*, compañía cualificada por el Municipio Autónomo de Caguas para presentar una propuesta de servicios para la renovación, administración, mantenimiento y reparación de la flota vehicular.

3. Que, en cumplimiento con los requisitos de las guías para la presentación de propuestas, certifico que ningún empleado o funcionario del Municipio Autónomo de Caguas tiene interés pecuniario en la propuesta de servicios presentada por *(nombre de la compañía)*.

4. Que *(nombre de la compañía)* no tiene ningún acuerdo con persona particular, corporación o firma para someter al Municipio Autónomo de Caguas varias ofertas o propuestas bajo nombres distintos.

5. Que todo lo declarado es la verdad y nada más que la verdad.

Y PARA QUE ASÍ CONSTE, firmo la presente en _____, Puerto Rico, hoy ___ de _____ de 2021.

_____
Firma

AFFIDÁVIT NÚM. _____

Jurada y suscrita ante mí por _____, en representación de _____, de las circunstancias personales antes expresadas, a quien identifico mediante _____ con el número _____.

En _____, Puerto Rico, hoy ____ de _____ de 2021.

(Sello Notarial)

_____
NOTARIO PÚBLICO

CAGUAS - Unit Cost of Parts
Location 41280

Department	Chassis ID	Description	Parts Cost	ide Service	Total Cost
ALCALD-D	F255321	1087 2020 CHVRL SILVERADO 2500 CC 4X	54.1	0	54.1
ALCALD-D	L410650	709 2003 FRDLT EXPEDITION	400.22	0	400.22
ALCALD-D	LA89606	508 1997 FRDLT EXPEDITION	571.93	0	571.93
ALCALD-D	2354522	793 2005 CHVRL BLAZER	577.55	0	577.55
ALCALD-D	L180943	973 2012 CHRYS JEEP WRANGLER	1,175.21	0	1,175.21
ALCALD-D	R352781	907, 2007, CHVRL, 5.3L TAHOE	878.97	551.95	1,430.92
ALCALD-D	2352002	795 2005 CHVRL BLAZER	1,481.38	35	1,516.38
ALCALD-D	R120001	957 2010 CHVRL TAHOE	1,299.9	450	1,749.9
ALCALD-D	6175875	815 2005 CHVRL BLAZER	1,648.97	716.75	2,365.72
ALCALD-D	R307574	1071 2019 GMCXX YUKON 4X4 XL	2,536.6	1,794	4,330.6
ALCALD-D	R183383	958 2011 CHVRL TAHOE	2,928.22	3,500.25	6,428.47
ASUNAMB-D	3349283	931 2008 TOYOT PRIUS HYBRID	493.76	135	1,208.76
ASUNAMB-D	0047626	892, 2005, TOYOT, 4RUNNER SUV	269.82	800	1,459.82
AUTGUE-D	K121725	684 2002 DODGE VAM	692.56	45	737.56
BELART-D	Z515635	168 1994 GMCCL PICK UP	974.21	1,385	3,554.54
C.SUB-D	6171027	832 2005 CHVRL TRA-BLAZER	1,470.49	45	3,040.16
COMMO-D	L173969	415 1998 JEEPX CHEROKEE	593.8	0	593.8
CULTUR-D	1116972	829 2006 CHVRL VAN 3500	308.26	0	308.26
CULTUR-D	K143335	657 2000 DODGE RAMVAN2500	778.97	150	928.97
CULTUR-D	B440694	874, 2005, DODGE, CARAVAN	593.94	1,015	1,608.94
CULTUR-D	K109295	642 2000 CHVRL BLAZER	1,239.59	1,565	2,804.59
DDPMC-D	H697754	135 1995 INTHR SCHOOL BUS	803.16	0	803.16
DDPMC-D	8178571	850 2006 CHVRL PICK-UP	785.58	135	920.58
DDPMC-D	HA93696	872, 2006, FORDX, SB E-350	1,135.49	0	1,135.49
DDPMC-D	4101094	589 1998 SUZUK VITARA	495.21	1,490	1,985.21
DDPMC-D	CX84493	886, 2007, FRECS, TROLLEY	1,848.58	685	2,533.58
DDPMC-D	CX84491	896, 2007, FRGHT, TROLLEY	2,390.64	250	2,640.64
DDPMC-D	H254325	398 1996 INTHR SCHOOL BUS	2,567.24	540	3,107.24
DDPMC-D	DB23107	977 2012 FORDX E450 BUS	2,161.7	1,508	3,669.7
DDPMC-D	CX84490	884, 2007, FRECS, TROLLEY	2,758.66	1,045	3,803.66
DDPMC-D	CX84488	894, 2007, FRGHT, TROLLEY	2,400.99	1,572.28	3,973.27
DDPMC-D	CX84494	897, 2007, FRGHT, TROLLEY	2,249.32	1,890	4,139.32
DDPMC-D	DB23109	980 2012 FORDX E450 BUS	4,383.7	205	4,588.7
DDPMC-D	CX84495	898, 2007, FRGHT, TROLLEY	2,388.28	2,248.55	4,636.83
DDPMC-D	DB23110	978 2012 FORDX E450 BUS	2,750.66	1,924.6	4,675.26
DDPMC-D	1198897	988 2012 CHVRL C3500 MINIBUS	3,828.47	944.34	4,772.81
DDPMC-D	1199601	991 2012 CHVRL C3500 MINIBUS	2,622.32	2,368.41	4,990.73
DDPMC-D	DB23108	976 2012 FORDX E450 BUS	2,785.46	2,243.53	5,028.99
DDPMC-D	J511097	678 2001 GMCXX BLUBIRD	5,235.55	365	5,600.55
DDPMC-D	DB23111	979 2012 FORDX E450 BUS	2,271.15	3,514.5	5,785.65
DDPMC-D	B561364	963 2012 INT CE	2,599.24	3,298.4	5,897.64
DDPMC-D	F241203	871, 2006, BLBRD, School Conv.	4,069.94	2,158.09	6,228.03
DDPMC-D	1200049	990 2012 CHVRL C3500 MINIBUS	3,462.1	2,903.58	6,365.68
DDPMC-D	CX84496	899, 2007, FRGHT, TROLLEY	2,096.39	4,725.95	6,822.34
DDPMC-D	CX84492	887, 2007, FRECS, TROLLEY	5,057.05	2,164.95	7,222
DDPMC-D	1198812	989 2012 CHVRL C3500 MINIBUS	4,446.29	2,885.23	7,331.52
DDPMC-D	DB23105	982 2012 FORDX E450 BUS	6,158.32	2,127.58	8,285.9
DDPMC-D	DB23106	983 2012 FORDX E450 BUS	5,888.88	3,654.9	9,543.78

DDPMC-D	DB23104	981 2012 FORDX E450 BUS	2,501.81	8,798.37	11,300.18
DDPMC-D	B561362	962 2012 INT CE	3,709.58	11,250.7	14,960.28
DESECO-D	1442784	1082 2020 FORDX TRANSIT CONNECT W	58.93	0	58.93
DESECO-D	R149697	926, 2001, CHRYS, Town & Country	103.21	50	153.21
DESECO-D	G101790	1072 2019 CHVRL SILVERADO 1500 CC 4	193.02	0	193.02
EDIFFI-D	K542315	166 1995 DODGE RAM 3500	32.55	0	32.55
EDIFFI-D	F266862	1097 2020 CHVRL SILVERADO 3500 SRW	33.95	0	33.95
EDIFFI-D	K154402	594 1998 CHVRL S10	0	45	45
EDIFFI-D	S343102	727 2003 DODGE DAKOTA PICK-UP	72.99	45	117.99
EDIFFI-D	1319971	1053 2017 CHVRL EXPRESS 2500 CARGC	299.49	0	299.49
EDIFFI-D	1318955	1052 2017 CHVRL EXPRESS 2500 CARGC	297.38	0	337.38
EDIFFI-D	4101073	588 1998 SUZUK VITARA	650.28	0	650.28
EDIFFI-D	8114543	681 2002 CHVRL PICK-UP	635.38	45	680.38
EDIFFI-D	0035667	1018 2015 JLGIN 41AMDC MANLIFT	346.71	0	724.04
EDIFFI-D	8274458	728 2003 CHVRL PICK UP	794.41	0	794.41
EDIFFI-D	8180118	857 2006 CHVRL PICK-UP	847.89	0	847.89
EDIFFI-D	F039205	595 1998 CHVRL 3500	916.8	0	916.8
EDIFFI-D	8121997	680 2002 CHVRL PICK-UP	1,003.68	0	1,003.68
EDIFFI-D	TA48545	238 1995 FRDLT RANGERXL	1,008.36	45	1,053.36
EDIFFI-D	W101077	586 1998, Susuki, Vitara	1,368.57	0	1,368.57
EDIFFI-D	K102010	332 1996 DODGE RAM 1500	1,471.54	90	1,561.54
EDIFFI-D	G176361	686 2002 DODGE DODGE	1,353.37	240	1,593.37
EDIFFI-D	8180176	859 2006 CHVRL PICK-UP	1,053.77	907.66	1,961.43
EDIFFI-D	CC66567	975 2012 ANDER NEGRO	1,303.33	0	2,210.01
EDIFFI-D	G179453	702 2002 DODGE RAM 1500	1,949.44	3,195	5,144.44
EDIFFI-D	M427577	974 2012 NWHOL C232	4,870.34	350	5,220.34
EDIFFI-D	G176359	689 2002 DODGE DODGE	1,521.22	4,402	5,923.22
EDIFFI-D	PB00397	708 1993 MACKX SKY MASTER DUMP	4,566.69	2,570	7,136.69
EDIFFI-D	J615082	971 2012 INT 7300	5,761.74	1,410.77	7,172.51
EDIFFI-D	G137649	846 2006 DODGE RAM 3500 CC 4X2 DRW	3,187.06	8,843.78	12,030.84
EDIFFI-D	0121794	929, 2008, JLG LIFT, 600AJ	6,828.26	6,510	13,338.26
EDUMUN-D	C795373	1038 2017 JEEPX GRAND CHEROKEE 4X	274.42	0	984.42
EVENESP-D	K109701	553 1998 DODGE RAM VAN	273.03	0	273.03
FINANZ-D	2355888	796 2005 CHVRL BLAZER	784.34	0	784.34
FINANZ-D	9330766	637 2002 CHVRL IMPALA	921.24	90	1,011.24
FINANZ-D	9329535	640 2000 CHVRL IMPALA	1,221.42	0	1,221.42
FINANZ-D	2352861	792 2005 CHVRL BLAZER	1,505.18	45	1,550.18
FINANZ-D	9329866	636 2000 CHVRL IMPALA	1,153.56	1,043.45	2,197.01
HEADST-D	J002158	339 1992 MTSBS MONTERO	14.96	0	14.96
HEADST-D	F103869	1094 2021 CHVRL SILVERADO 2500 CC 4	33.95	0	33.95
HEADST-D	F255399	1096 2021 CHVRL SILVERADO 2500 CC 4	33.95	0	33.95
HEADST-D	F103693	1093 2021 CHVRL SILVERADO 2500 CC 4	35.02	0	35.02
HEADST-D	F103896	1092 2021 CHVRL SILVERADO 2500 CC 4	35.02	0	35.02
HEADST-D	F290871	1089 2020 CHVRL SILVERADO 2500 EC 4	54.68	0	54.68
HEADST-D	F290818	1091 2020 CHVRL SILVERADO 2500 EC 4	63.48	0	63.48
HEADST-D	F290840	1090 2020 CHVRL SILVERADO 2500 EC 4	63.85	0	63.85
HEADST-D	C565350	1075 2019 DODGE RAM 2500 CC 4X4 PIC	200.64	0	200.64
HEADST-D	ED33490	1083 2019 FORDX F550 RC 4X2 XL 6.7L P	210.02	0	210.02
HEADST-D	G565351	1076 2019 DODGE RAM 2500 CC 4X4 PIC	199.25	50.18	249.43

HEADST-D	KA03728	1079 2019 FORDX TRANSIT VAN 250	356.19	0	356.19
HEADST-D	E245750	291 1993 CHVRL 3500	383.12	0	383.12
HEADST-D	F030269	443 1989 CHVRL ESCOLAR	381.32	150	531.32
HEADST-D	EA67199	341 1995 FRDLT F450	597.34	75	672.34
HEADST-D	NA81981	292 1992 FRDLT VAN350	684.32	175	859.32
HEADST-D	8176996	714 2003 CHVRL PICK UP	1,211.84	134.99	1,346.83
HEADST-D	8176876	715 2003 CHVRL PICK UP	1,355.87	45	1,400.87
HEADST-D	KA46548	964 2011 FORDX ESCAPE	970.04	765.63	1,735.67
HEADST-D	G635744	1037 2017 DODGE RAM 2500 CC 4X2 ST	879.15	0	1,745.82
HEADST-D	HA46793	346 1996 FRDLT F350	1,580.18	340	1,920.18
HEADST-D	EA47412	539 1996 FRDLT F350	1,908.16	80	1,988.16
HEADST-D	1227729	725 2003 CHVRL ESCOLAR	2,141.1	135	2,276.1
HEADST-D	J620442	718 2003 DODGE RAMP	2,523.39	409	2,932.39
HEADST-D	1227038	724 2003 CHVRL ESCOLAR	1,707.05	1,965	3,672.05
JDNBOT-D	X650FA4	893, 2004, HONDA, RINCON	118.42	0	118.42
JDNBOT-D	0059605	836 2005 HOMMD L3400	367.99	0	367.99
JDNBOT-D	1068754	918, 2007, KUBOTA, RTV-900	679.13	0	679.13
JDNBOT-D	0JD655C	271 1991 FRDLT 655C	729.08	150	879.08
JDNBOT-D	C250015	690 2002 JHNDR TRACTOR	1,139.23	0	1,139.23
JDNBOT-D	1284750	744 2002 CHVRL SIVERADO	1,175.45	0	1,175.45
JDNBOT-D	EA30369	856 2006 FRDLT TUNBA F450	1,124.8	195.13	1,319.93
JDNBOT-D	0121067	932, 2007, BOMAG, BW120AD-4	1,286.45	590	1,876.45
LEGMUN-D	F510385	888, 2007, DODGE, DURANGO	1,196.98	2,040.63	3,237.61
O.P.M.-D	682	682 2002 NEW HOLLAND LB 75.B	58.25	0	58.25
O.P.M.-D	ED33483	1068 2019 FORDX F550 CC 4X2 DUMP	125.22	0	125.22
O.P.M.-D	K154593	592 1998 CHVRL S10	128.54	0	128.54
O.P.M.-D	ED33484	1069 2019 FORDX F550 CC 4X2 DUMP	157.48	0	157.48
O.P.M.-D	TEA3827	336 1996 FRDLT F350	500.57	0	500.57
O.P.M.-D	K241883	631 2000 CHVRL PICKUP	500.19	45	545.19
O.P.M.-D	F060252	610 1998 CHVRL C30	604.44	0	604.44
O.P.M.-D	H366044	1059 2019 INT MV607 TUMBA DUMP	975.58	215.76	1,191.34
O.P.M.-D	H366053	1058 2019 INT MV607 TUMBA DUMP	1,220.69	210.41	1,431.1
O.P.M.-D	F041622	611 1998 CHVRL C30	1,432.35	115	1,547.35
O.P.M.-D	8182497	851 2006 CHVRL PICK-UP	1,637.11	45	1,682.11
O.P.M.-D	2351103	794 2005 CHVRL BLAZER	1,701.14	165	1,866.14
O.P.M.-D	8214457	780 2005 CHVRL SIVERADO	1,429.03	500	1,929.03
O.P.M.-D	S451552	788 2005 TOYOT TUNDRA	742.08	518.53	1,940.61
O.P.M.-D	L169166	1025 2016 JEEPX WRANGLER 4X4	997.62	0	1,970.42
O.P.M.-D	L129634	998 2014 JEEPX WRANGLER 4X4	1,168.66	0	2,121.33
O.P.M.-D	H404648	273 1992 INTHR S2554	2,375.76	0	2,375.76
O.P.M.-D	5756266	712 2002 INTHR 4300	1,184.1	401.1	2,568.93
O.P.M.-D	G137650	873, 2006, DODGE, RAM3500	1,355.67	1,260	2,615.67
O.P.M.-D	H404649	186 1992 INTHR 4900	2,243.28	390.25	2,633.53
O.P.M.-D	EA50809	126 1995 FRDLT F350 5.8L	2,105.23	550	2,655.23
O.P.M.-D	C024615	855 2005 HOMMD TRL	506.5	2,067.5	2,894
O.P.M.-D	H404650	184 1992 INTHR 4900	3,060.65	0	3,060.65
O.P.M.-D	5882169	638 2000 INGRN SD 70DA	3,844.88	0	3,844.88
O.P.M.-D	H575625	713 2003 INTHR 4300	4,084.64	150	4,234.64
O.P.M.-D	H565287	701 2002 INTHR 7400	4,033.59	445	4,478.59

O.P.M.-D	C171941	721 2004 JEEPX CHEROKEE	1,026.94	3,520	4,546.94
O.P.M.-D	Z207806	777 2004 CHVRL SIVERADO	1,322.62	3,260	4,582.62
O.P.M.-D	9902000	401 1991 FRDLT 655E	3,584.48	1,485	5,069.48
O.P.M.-D	G176360	685 2002 DODGE DODGE	1,787.97	3,520	5,307.97
O.P.M.-D	L000402	984 2009 New Kaufman SSW-4K-14	1,111.22	3,874.68	5,796.58
O.P.M.-D	H652288	612 1998 INT TUNBA	6,313.47	0	6,313.47
O.P.M.-D	H569485	703 2003 INTHR 4300	6,263.76	641.54	6,905.3
O.P.M.-D	3V95618	178 1981 CTRPL IT28B	6,292.29	679	6,971.29
O.P.M.-D	C753385	1067 2019 CASEX 580SN 4X4 BACKHOE	4,852.08	2,938.8	7,790.88
O.P.M.-D	H404651	182 1992 INTHR TUMBA	7,915.78	1,190	9,105.78
O.P.M.-D	000655C	682 2002 DIGGER FORD W/BH 655C	12,483.82	228.45	12,712.27
O.P.M.-D	0000YEO	671 2000 JCB AM50684	6,037.61	10,054.35	16,091.96
O.P.M.-D	5271014	934, 2008, BOMAG, BF815 PAVER ASPHAI	16,915.28	0	16,915.28
O.P.M.-D	J048688	700 2002 INTHR 7400	11,592.66	5,760	17,352.66
O.P.M.-D	J444194	961 2012 INT 7400	7,906.62	9,950	17,856.62
O.P.M.-D	3054451	824 2005 FRDLT LB75B 4WD	10,904.82	7,475	18,379.82
O.P.M.-D	2010915	969 2011 JCB 3CX	14,212.73	4,323.3	18,536.03
OMME-D	828	828 2005 CHVRL SILVERADO	18.39	0	18.39
OMME-D	8470639	953 2008 SLRTC DISPLAY	0	0	86.67
OMME-D	68PR008	954 2008 ALMND NIGHT-LITE PRO	0	0	86.67
OMME-D	W920602	1084 2019 ZZZZZ APT LTV4 LIGHT TOWE	0	0	186
OMME-D	1149073	1056 2018 CHVRL COLORADO CC 4X4	204.56	0	204.56
OMME-D	1151960	1055 2018 CHVRL COLORADO CC 4X4	234.51	0	234.51
OMME-D	F142114	869 1998 FORDX MUSTANG	338.9	0	338.9
OMME-D	8470648	952 2008 SLRTC DISPLAY	275.33	0	375.33
OMME-D	BB15485	985 2013 FORDX EDGE	400.76	0	400.76
OMME-D	BB46929	987 2013 FORDX EDGE	437.89	0	437.89
OMME-D	BB46928	986 2013 FORDX EDGE	502.4	0	502.4
OMME-D	J519541	311 1992 GMCCL WATERTANK	640.27	0	640.27
OMME-D	W906872	1074 2017 ATLCP V4 LIGHT TOWER	349.2	0	729.2
OMME-D	69PR008	949 2008 ALMND NIGHT-LITE PRO	223.89	0	734.56
OMME-D	W559108	772 2005 JEEPX LIBERTY	703.91	70	773.91
OMME-D	KB23017	1078 2019 FORDX TRANSIT 250 AMBULAI	934.49	0	934.49
OMME-D	HA33810	995 2003 FORDX E350 EXT VAN	1,135.06	0	1,135.06
OMME-D	K229760	406 1997 CHVRL S10	525.76	695	1,220.76
OMME-D	T121421	1017 2015 POLRS RANGER 800 EFI	596.1	0	1,347.04
OMME-D	L410650	709 2003 FRDLT EXPEDITION	621.21	740	1,361.21
OMME-D	4276286	972 2012 POLRS	1,462.59	0	1,462.59
OMME-D	G308403	1034 2017 DODGE RAM 2500 CC 4X4	345.44	0	1,548.77
OMME-D	TA15512	102 1995 FRDLT RANGERXL 3.0L	404.5	1,145	1,549.5
OMME-D	J523010	426 1994 GMCCL WATERTANK	1,565.17	0	1,565.17
OMME-D	HA29667	394 1997 FRDLT CLUBWAGON	864.29	0	1,671.09
OMME-D	HX57559	905, 2007, FRGHT, M2-RESCUE	2,186.91	22.3	2,209.21
OMME-D	2245136	904, 2007, CHVRL, TRA-BLAZ	2,078.93	85	2,363.93
OMME-D	HA01776	510 1993 FRDLT VAN	490.58	1,875	2,365.58
OMME-D	SS19430	309 1992 GMCCL WATERTANK	2,068.03	300	2,368.03
OMME-D	H439383	372 1992 INTHR WATERTANK	2,772.25	0	2,772.25
OMME-D	W559113	771 2005 JEEPX LIBERTY	583.56	2,370	2,953.56
OMME-D	H664382	143 1995 INT 4700	3,308.86	0	3,308.86

OMME-D	70PR008	951 2008 ALMND NIGHT-LITE PRO	113.63	2,840	3,420.7
OMME-D	GA51138	1033 2017 FORDX EXPLORER INTERCEP	1,153.22	2,583.63	3,736.85
OMME-D	K111196	643 2000 CHVRL BLAZER	592.32	3,245	3,837.32
OMME-D	G844079	826 2005 DODGE RAM	2,154.59	1,861.5	4,016.09
OMME-D	H199240	840 2006 INTHR WATERTANK	4,092.73	0	4,092.73
OMME-D	HA13333	302 1995 FRDLT CLUBWAGON	1,795.73	2,300	4,095.73
OMME-D	G796364	405 1997 DODGE PICK UP	1,891.63	2,307.44	4,199.07
OMME-D	F108676	828 2005 CHVRL SILVERADO	1,559.34	3,075	4,634.34
OMME-D	HB89448	994 2003 FORDX E350 EXTENDED VAN	1,584.61	3,701.6	5,286.21
OMME-D	67PR008	950 2008 ALMND NIGHT-LITE PRO	508.39	4,350	5,500.53
OMME-D	FG20249	1013 2015 DODGE RAM 2500 CC 4X4	5,535.71	1,773.44	7,309.15
OMME-D	KA50802	1036 2017 FORDX TRANSIT T250 TCN AM	2,460.25	5,057	7,517.25
OMME-D	1053069	799 2005 FRDLT LB7B2WD	9,749.06	300	10,049.06
OMME-D	EE22464	659 2000 FRDLT PICKUP	6,050.36	4,342.75	10,393.11
OMME-D	1172091	1000 2013 CHVRL EXPRESS 3500 EXT VA	7,197.44	3,803.03	11,000.47
OMME-D	1032031	706 2002 JHNDR LB75BFWD	9,796.35	2,067	11,863.35
OMME-D	1170671	999 2013 CHVRL EXPRESS 3500 EXT VAN	8,717.14	6,636.02	15,793.83
OMME-D	EB17427	863, 2006, FORD, F550	8,780.06	23,674	32,454.06
ORNATO-D	889	889, 2006, ANDERSON, T-1	0	0	40
ORNATO-D	7190142	1077 2019 ZZZZZ BADBOY MZ MAGNUM	79.61	0	79.61
ORNATO-D	C279222	613, 1998, ANDER, TRAILER 46024A	161.65	0	214.99
ORNATO-D	0481177	1002 2006 ZZZZZ KIFCO T200CS WATER	32.52	0	293.19
ORNATO-D	Z229155	591 1998 CHVRL 1500	397.64	0	397.64
ORNATO-D	Z225356	1070 2019 CHVRL SILVERADO 1500 CC 4X	482.8	0	482.8
ORNATO-D	8055711	835, 2005, ANDER, TRAILER 96528A	376.07	0	819.53
ORNATO-D	HA67084	745 2004 FRDLT E350	719.78	152.76	872.54
ORNATO-D	0131600	920, 2005, DIXSN, Kodiak ztr	1,019.47	0	1,019.47
ORNATO-D	2116369	399 1997 CHVRL BLAZER	1,023.41	40	1,063.41
ORNATO-D	K240696	634 2000 CHVRL PICKUP	929.11	166	1,095.11
ORNATO-D	T303018	730, 2003, COAST, TRAILER 79216-A	305.49	343.92	1,322.75
ORNATO-D	8180059	858 2006 CHVRL PICK-UP	1,298.84	120	1,418.84
ORNATO-D	S131006	564 1998 JHNDR 5310	1,118.2	360	1,478.2
ORNATO-D	8180374	853 2005 CHVRL PICK-UP	1,016.5	490	1,506.5
ORNATO-D	ZAALL01	762 2003 FRDLT 705382M	1,573.94	0	1,573.94
ORNATO-D	131588	921, 2005,DIXSN, Kodiak ztr	1,909.38	0	1,909.38
ORNATO-D	F951778	791 2005 CHVRL PICK UP	2,013.33	0	2,013.33
ORNATO-D	MD74242	1001 2009 TOROX Z -MASTER	2,021.07	0	2,021.07
ORNATO-D	J620441	719 2003 DODGE RAMP	2,160	0	2,160
ORNATO-D	TA53699	541 1995 FRDLT RANGEXL	916.65	1,245	2,161.65
ORNATO-D	5706233	996 2013 DIXSN ULTRA ZTR	2,223.53	0	2,223.53
ORNATO-D	J128705	848 2005 DODGE PICK-UP	2,279.45	45	2,324.45
ORNATO-D	F953879	790 2005 CHVRL PICK UP	2,402.23	107	2,509.23
ORNATO-D	S233621	716 2003 DODGE PICK UP	2,464.99	65	2,529.99
ORNATO-D	CA63152	747 2004 Ford F150	1,912.75	1,095.82	3,008.57
ORNATO-D	5706403	997 2013 DIXSN ULTRA ZTR	3,087.04	135	3,222.04
ORNATO-D	H454438	1032 2016 INT 4300	2,414.56	1,401	3,815.56
ORNATO-D	TA48544	239 1995 FRDLT RANGERXL	2,482.3	1,540	4,022.3
ORNATO-D	H569075	704 2002 INTHR 4300	4,292.71	645	4,937.71
ORNATO-D	G137648	847 2005 DODGE RAM 3500 CC 4X2 DRW	4,135.1	964.88	5,099.98

ORNATO-D	1216768	785 2005 CHVRL VAN	1,698.66	4,248.23	5,946.89
ORNATO-D	G866201	827 2005 DODGE RAM	1,893.07	4,225	6,118.07
ORNATO-D	J269146	854 2005 INTHR WATERTANK	4,718.21	1,550	6,268.21
ORNATO-D	G176363	688 2002 DODGE DODGE	2,021.91	4,400	6,421.91
ORNATO-D	FO15488	402 1997 GMCCL TUMBA	4,974.43	1,650	6,624.43
ORNATO-D	M456036	919 2007 NWHOL SKID STEER LOADER	6,990.61	80	7,070.61
ORNATO-D	H549999	417 1998 INT TUMBA	4,825.89	3,000	7,825.89
ORNATO-D	H694184	800 2006 INT TUNBA	7,651.33	5,001.15	12,652.48
ORNATO-D	J463285	915 2007 INT 7300 RL GARBAGE TRUCK 2	31,305.65	3,272.43	34,578.08
PERMIS-D	7178942	779 2004 CHVRL CAVALIER	353.69	60	413.69
PERMIS-D	W559106	774 2005 JEEPX LIBERTY	701.94	0	701.94
PERMIS-D	TA15513	103 1995 FRDLT RANGERXL 3.0L	617.67	235	852.67
PERMIS-D	2154055	626 1999 CHVRL BLAZER	984.4	180	1,164.4
PERMIS-D	2230268	625 1999 CHVRL BLAZER	1,176.14	90	1,266.14
PERMIS-D	2230440	624 1999 CHVRL BLAZER	1,237.15	334.24	1,941.39
PLANIF-D	C194732	1081 2020 JEEPX GRAND CHEROKEE 4X4	78.18	0	78.18
PLANIF-D	0064981	786 2005 TOYOT RAV4	512.48	0	872.48
PLANIF-D	S451552	788 2005 TOYOT TUNDRA	515.89	285	967.56
PROTEC-D	1039	1039 2017 FORDX EXPLORER INTERCEP	16.93	0	16.93
PROTEC-D	044439	1026 1988 CHVRL HUMVEE/ M-998	22.12	0	22.12
PROTEC-D	880	880, 2002, FORDX, F150	46.46	0	46.46
PROTEC-D	2346381	811 2005 CHVRL BLAZER	48.46	0	48.46
PROTEC-D	2107152	867, 2006, SUZUK, VL800	135.45	0	135.45
PROTEC-D	A012568	1073 2019 HUSQZ YTH20K42 BELLY MOW	184.19	45	229.19
PROTEC-D	U005508	1006 2014 MTSBS LANCER	298.53	0	298.53
PROTEC-D	6216609	751 2004 CHVRL BLAZER	363.11	0	363.11
PROTEC-D	2249373	910, 2007, GMCXX, ENVOY	860.75	0	860.75
PROTEC-D	W517280	885, 2007, JEEP, LIBERTY	946.86	0	946.86
PROTEC-D	60D0282	883, 2000, CHVRL, SILVERADO EXT.	1,086.09	65	1,151.09
PROTEC-D	GA55982	1063 2019 FORDX EXPLORER INTERCEP	1,164.74	0	1,164.74
PROTEC-D	037528	1027 1988 CHVRL HUMVEE / M-1025	1,196.83	0	1,196.83
PROTEC-D	GA55979	1065 2019 FORDX EXPLORER INTERCEP	1,217.88	0	1,217.88
PROTEC-D	2011598	1007 2010 TOYOT HIGHLANDER	1,397.71	0	1,397.71
PROTEC-D	6113056	764 2005 CHVRL BLAZER	1,459.04	45	1,504.04
PROTEC-D	-147406	1012 2014 STAMM MANUF ST21	433.82	0	1,553.69
PROTEC-D	0097313	1020 2006 HYUND SANTA FE 4X2	785.25	873.71	1,658.96
PROTEC-D	2107394	877, 2006, SUZUK, BOULEVARD C50 800	1,694.47	0	1,694.47
PROTEC-D	2107148	866, 2006, SUZUK, VL800	1,794.87	0	1,794.87
PROTEC-D	2230515	1023 2004 CHVRL TRAILBLAZER 4X2	921.2	950	1,871.2
PROTEC-D	GA55977	1064 2019 FORDX EXPLORER INTERCEP	2,189.79	0	2,189.79
PROTEC-D	GA55981	1062 2019 FORDX EXPLORER INTERCEP	2,585.37	0	2,585.37
PROTEC-D	6112753	766 2005 CHVRL BLAZER	2,019	607.06	2,626.06
PROTEC-D	CA19201	1021 1994 FORDX F450 RC 4X4 DRW TOV	2,668.09	0	2,668.09
PROTEC-D	2114742	831 2005 SUZUK VL800	2,678.35	0	2,678.35
PROTEC-D	1250365	882, 2006, CHVRL EXPRESS VAN 3500	1,314.98	1,459.5	2,774.48
PROTEC-D	GC08121	1039 2017 FORDX EXPLORER INTERCEP	2,780.82	0	2,780.82
PROTEC-D	GA55978	1066 2019 FORDX EXPLORER INTERCEP	2,797.97	0	2,797.97
PROTEC-D	2101936	944 2009 SUZUK 800CCAG	2,600.98	450	3,050.98
PROTEC-D	2249439	942, 2008, CHVRL, TRAIL BLAZER	2,234.06	777.88	3,101.94

PROTEC-D	2114739	830 2005 SUZUK VL800	3,116.46	0	3,116.46
PROTEC-D	GA55980	1061 2019 FORDX EXPLORER INTERCEP	3,186.56	0	3,186.56
PROTEC-D	K302014	665 2000 HONDA SHADOW	3,192.28	55	3,247.28
PROTEC-D	2107147	868, 2006, SUZUK, VL800	3,115.36	150	3,265.36
PROTEC-D	2351488	805 2005 CHVRL BLAZER	1,720.45	1,667.61	3,388.06
PROTEC-D	2107135	865, 2006, SUZUK, VL800	3,517.18	0	3,517.18
PROTEC-D	6112742	763 2005 CHVRL BLAZER	3,274.13	250	3,524.13
PROTEC-D	M705033	731 2003 HONDA VT750CY	3,517.58	45	3,562.58
PROTEC-D	2101953	948 2009 SUZUK VL800C	3,552.58	90	3,642.58
PROTEC-D	2107398	878, 2006, SUZUK, BOULEVARD C50 800	3,806.81	0	3,806.81
PROTEC-D	R289944	1004 2010 FORDX FUSION	2,596.7	1,297.05	3,893.75
PROTEC-D	2249026	939, 2008, CHVRL, TRAIL BLAZER	3,215.67	691.75	3,907.42
PROTEC-D	2237376	902, 2007, CHVRL, TRA-BLAZ	2,834.35	1,135	3,969.35
PROTEC-D	2242893	814 2005 CHVRL BLAZER	2,995.7	998.31	3,994.01
PROTEC-D	GA55976	1060 2019 FORDX EXPLORER INTERCEP	3,867.92	124.95	4,032.87
PROTEC-D	2238108	900, 2007, CHVRL, TRA-BLAZ	2,157.29	1,930.38	4,087.67
PROTEC-D	2114731	838 2005 SUZUK VL800	3,972.3	150	4,122.3
PROTEC-D	Y682671	861 2006 HRLDV FLHTPI	4,312.27	0	4,312.27
PROTEC-D	L946340	1010 2012 NSSMT VERSA S	3,191.51	1,129.15	4,320.66
PROTEC-D	2114729	839 2005 SUZUK VL800	4,332.5	0	4,332.5
PROTEC-D	N300280	667 2000 HONDA SHADOW	4,298.49	425	4,723.49
PROTEC-D	2171038	930, 2008, CHVRL, ENVOY	3,078.81	1,447.18	4,905.99
PROTEC-D	4205191	1022 2007 SUZUK GRAND VITARA 4X2	3,953.16	1,213.91	5,167.07
PROTEC-D	4100125	1011 2012 SUZUK GRAND VITARA	4,111.57	1,355	5,466.57
PROTEC-D	60D0284	880, 2002, FORDX, F150	1,445.19	4,198	5,643.19
PROTEC-D	F252871	870, 2006, CHVRL, SILVERADO	2,699.74	3,008.59	5,708.33
PROTEC-D	2245304	936, 2008, CHVRL, TRAIL BLAZER	3,441.56	2,297.77	5,739.33
PROTEC-D	2243652	940, 2008, CHVRL, TRAIL BLAZER	2,559.75	4,001.04	6,560.79
PROTEC-D	2245046	941, 2008, CHVRL, TRAIL BLAZER	3,765.53	3,081.96	6,847.49
PROTEC-D	R183796	946 2009 CHVRL TAHOE	6,161.77	970.28	7,132.05
PROTEC-D	2243019	903, 2007, CHVRL, TRA-BLAZ	2,829.91	4,385.17	7,215.08
PROTEC-D	R181113	947 2009 CHVRL TAHOE	5,090.21	3,403.99	8,494.2
PROTEC-D	F210363	720 2003 INTHR BUSPATROL	2,812.28	6,995	9,807.28
PROTEC-D	G210922	1009 2012 KIAXX SORENTO SX	2,238.5	8,253.29	10,491.79
PROTEC-D	R183106	945 2009 CHVRL TAHOE	4,272.64	9,416.29	13,688.93
PROTEC-D	D566005	1005 2012 JEEPX PATRIOT 4X2	3,009.14	12,199.99	15,209.13
RECDEP-D	W559112	770 2005 JEEPX LIBERTY	192.76	45	237.76
RECDEP-D	PA07506	956 2010 FORDX RANGER	469.44	0	469.44
RECDEP-D	HA67084	745 2004 FRDLT E350	440.81	134	574.81
RECDEP-D	7180162	1057 2018 ZZZZZ BAD BOY MZ MAGNUM	716.21	0	716.21
RECDEP-D	1237495	912, 2007, CHVRL, EXPRESS	707.21	114.99	822.2
RECDEP-D	F953928	789 2005 CHVRL PICK UP	784.5	45	829.5
RECDEP-D	W559109	773 2005 JEEPX LIBERTY	851.67	0	851.67
RECDEP-D	1247495	914, 2007 CHVRL EXPRESS	822.01	45	867.01
RECDEP-D	HA14804	434 1998 FRDLT CLUBWAGON	934.4	45	979.4
RECDEP-D	8179913	852 2006 CHVRL PICK-UP	959.6	329.38	1,288.98
RECDEP-D	4359235	444 1995 ISUZU RODEO 4X2	422.48	880	1,302.48
RECDEP-D	8194058	705 2002 CHVRL PIC UP	1,369.9	289.98	1,659.88
RECDEP-D	CA63153	746 2004 Ford F150	1,455.05	3,270	4,725.05

SALUD-D	F202057	679 2001 CHVRL ESCOLAR	5,188.15	0	5,188.15
SANEAM-D	1U2282	775, 2004, ASPLN, 5P111HP3	44.85	0	44.85
SANEAM-D	Z197700	1085 2020 CHVRL SILVERADO 1500 EC 4X	52.77	0	52.77
SANEAM-D	1103531	1088 2021 CHVRL COLORADO CC 4X4	77.68	0	77.68
SANEAM-D	H645566	305 1995 INTHR 4700	154.66	0	154.66
SANEAM-D	K209990	384 1996 CHVRL PICK UP	574.11	0	574.11
SANEAM-D	W140017	1014 2015 TOYOT RAV4	231.95	0	855.28
SANEAM-D	4101084	587 1998, Susuki, Vitara	336.91	0	1,458.92
SANEAM-D	X065656	1016 2015 TOYOT TACOMA 4X2	524.4	0	1,494.4
SANEAM-D	1235783	1029 2016 CHVRL COLORADO EC 4X2	801.66	0	1,983
SANEAM-D	1238966	1028 2016 CHVRL COLORADO EC 4X2	1,007.1	0	2,003.77
SANEAM-D	KB17858	615 1999 FRDLT F-150	1,438.52	830	2,268.52
SANEAM-D	G154038	928, 2008 DODGE, RAM 2500	2,442.56	45	2,487.56
SANEAM-D	H334161	670 2001 INT 4700	2,524.43	0	2,524.43
SANEAM-D	G598072	967 2011 DODGE RAM 5500	2,537.39	0	2,537.39
SANEAM-D	F015628	476 1997 GMCCL 350	2,323	225	2,548
SANEAM-D	8141902	845 2006 CHVRL PICK-UP	1,276.79	1,337.3	2,614.09
SANEAM-D	TA45560	577 1998 FRDLT RANGER	825.55	2,085	2,910.55
SANEAM-D	H262358	860 2006 INT GANCHERO	2,724.92	250	2,974.92
SANEAM-D	H199640	801 2006 INT GANCHERO	2,861.03	150	3,011.03
SANEAM-D	TA45559	576 1998 FRDLT RANGER	1,439.25	1,649.03	3,088.28
SANEAM-D	2356222	875, 2006, GMXXX, ENVOY	2,705.28	423.06	3,128.34
SANEAM-D	H395359	1054 2019 INT 4300 GRAPPLER	2,924.1	332.56	3,256.66
SANEAM-D	EC16817	691 2002 FRDLT PICK UP	3,133.83	690	3,823.83
SANEAM-D	H439384	422 1992 INTHR WATERTANK	4,082.97	150	4,232.97
SANEAM-D	H382524	677 2001 INT 4700	4,093.64	150	4,243.64
SANEAM-D	H199639	802 2006 INT GANCHERO	3,777.67	495	4,272.67
SANEAM-D	8146420	844 2006 CHVRL PICK-UP	2,272.03	2,010	4,282.03
SANEAM-D	Z175915	864, 2006, CHVRL, SILVERADO	694.36	4,197.15	4,891.51
SANEAM-D	5V12157	768 2005 FRDLT RECICLAGE	5,595.68	0	5,595.68
SANEAM-D	H245654	843 2006 INT 4300	5,396.98	1,256.78	6,653.76
SANEAM-D	H057374	1003 2014 INT 999 SERIE 7300	5,263.34	1,444.8	6,708.14
SANEAM-D	H299922	650 2000 INT 4700 DUMP	1,943.22	4,950	6,893.22
SANEAM-D	G176362	687 2002 DODGE DODGE	2,685.1	5,830	8,515.1
SANEAM-D	H139202	767 2005 INT 4700 GARBAGE TRUCK	6,628.44	3,640	10,268.44
SANEAM-D	H293551	1024 2016 INT 4300 NEW WAY 11YD REAI	8,278.67	2,475	10,753.67
SANEAM-D	HBL6836	970 2012 FRGHT M2106	10,728.29	1,445	12,173.29
SANEAM-D	H198479	804 2006 INT 4700 RL GARBAGE TRUCK 2	13,173.91	589.17	13,763.08
SANEAM-D	J471417	891 2007 INT 7300 CRANE	12,594.89	2,395.68	14,990.57
SANEAM-D	H368899	669 2001 INT 4700	9,735.33	5,280	15,015.33
SANEAM-D	H368898	668 2001 INT 4700	15,739.92	860	16,599.92
SANEAM-D	H586779	717 2003 INT 4300 GARAGE TRUCK	8,628.52	10,002.68	18,631.2
SANEAM-D	H198475	803 2006 INT 4700 RL GARBAGE TRUCK 2	9,353.03	9,290	18,723.03
SANEAM-D	H105939	1019 2016 INT 7400 PAKMOR 20YD COMP	9,329.44	27,617.51	36,946.95
SDI-D	B440695	841 2005 DODGE CARAVAN	516.08	0	516.08
SECINF-D	S084988	784, 2004, EAGMF, LAWN CARE 76089A	0	0	40
SECINF-D	7343656	729 2003 CHVRL CAVALIER	419.21	0	419.21
SECINF-D	K241977	633 2000 CHVRL PICKUP	634.26	0	634.26
SECINF-D	S814686	213 1995 CHVRL CAVALIER	439.82	0	679.82

SECINF-D	1497133	1050 2017 ZZZZZ WG MANF F1975 1000 G	414.23	0	684.23
SECINF-D	5832630	598 1997 CHVRL CAVALIER	776.91	195	1,175.24
SECINF-D	9329606	641 2000 CHVRL IMPALA	1,344.36	0	1,344.36
SECINF-D	W559112	770 2005 JEEPX LIBERTY	54.53	1,465	1,519.53
SECINF-D	H204358	249 1995 INTHR 4700	1,266.41	0	1,693.61
SECINF-D	J010093	392 1992 MTSBS MONTERO	539.8	1,808.45	3,438.25
SECINF-D	F186854	1051 2018 CHVRL SILVERADO 2500 CC 4X	2,515.34	0	4,358.55
SECREDESA	Z108222	1095 2021 CHVRL SILVERADO 1500 DC 4X	101.54	0	101.54
SECREDESA	KA22553	1086 2020 FORDX TRANSIT 350 15 PASS	16.07	1,200	1,216.07
SECRET-D	563	563 1995 FRDLT 1720	18.87	0	18.87
SECRET-D	KA22553	1086 2020 FORDX TRANSIT 350 15 PASS	92	0	92
SECRET-D	0030217	563 1995 FRDLT 1720	375.94	0	375.94
SECRET-D	7180154	1080 2018 ZZZZZ BADBOY MZ MAGNUM	667.88	0	667.88
SECRET-D	8314096	876, 2006, CHVRL, PICKUP COLORADO	1,052.97	225	1,277.97
SECRET-D	B440696	842 2005 DODGE CARAVAN	1,466.98	0	1,466.98
SECRET-D	1060848	906, 2007, NWHOL, B95-2WD	5,557.87	0	5,557.87
SER/CIUD-D	K518276	269 1995 DODGE RAM 3500	172.27	45	217.27
SER/CIUD-D	TA39822	211 1995 FRDLT RANGER XL	588.74	120	708.74
SER/CIUD-D	KA42792	1048 2017 FORDX TRANSIT 350	1,213.89	0	1,213.89
SER/CIUD-D	K505043	674 2001 DODGE VAN	1,049.36	215	1,264.36
SER/CIUD-D	HB44304	862 2005 FRDLT VAN	1,508.05	0	1,508.05
SER/CIUD-D	KA41562	1041 2017 FORDX TRANSIT 350 CARGO	1,592.56	0	1,592.56
SER/CIUD-D	KA42808	1049 2017 FORDX TRANSIT 350	1,373.06	290	1,663.06
SER/CIUD-D	KA42789	1047 2017 FORDX TRANSIT 350	1,218.01	550	1,768.01
SER/CIUD-D	KA42804	1046 2017 FORDX TRANSIT 350	1,931.55	154	2,085.55
SER/CIUD-D	HB24830	781 2004 FRDLT VAN	2,675.5	220	2,895.5
SER/CIUD-D	HB24841	783 2004 FRDLT VAN	3,082.78	289.99	3,372.77
SER/CIUD-D	HB24832	782 2004 FRDLT VAN	1,995.2	1,605	3,600.2
SER/CIUD-D	KA42844	1040 2017 FORDX TRANSIT 350 CARGO	2,287.24	1,502	3,789.24
SER/CIUD-D	5868207	890, 2006, DODGE, VAN SPR	1,060.49	3,117	4,177.49
SER/CIUD-D	1176320	834 2005 CHVRL VAN	3,353.02	2,720	6,073.02
VIVIEN-D	4101084	587 1998, Susuki, Vitara	14.74	0	14.74
VIVIEN-D	L147784	1044 2018 CHVRL TRAX FWD	203.14	0	203.14
VIVIEN-D	HA67080	752 2004 FRDLT VAN	227.56	0	227.56
VIVIEN-D	W559108	772 2005 JEEPX LIBERTY	329.98	0	329.98
VIVIEN-D	L147741	1043 2018 CHVRL TRAX FWD	357.58	0	357.58
VIVIEN-D	W559113	771 2005 JEEPX LIBERTY	411.91	0	411.91
VIVIEN-D	W559109	773 2005 JEEPX LIBERTY	444.8	0	444.8
VIVIEN-D	4101073	588 1998 SUZUK VITARA	459.35	0	459.35
VIVIEN-D	L148172	1045 2018 CHVRL TRAX FWD	189.21	193	482.21
VIVIEN-D	L148050	1042 2018 CHVRL TRAX FWD	448.35	0	568.35
VIVIEN-D	W682271	913,2007, JEEPX, LIBERTY	659.88	39.03	698.91
VIVIEN-D	W559114	769 2005 JEEPX LIBERTY	867.47	90	957.47
VIVIEN-D	UB78111	1031 2017 FORDX ESCAPE 4X2	265.45	0	1,195.45
VIVIEN-D	Z160064	778 2005 CHVRL SIVERADO	1,279.91	0	1,279.91
VIVIEN-D	UA46142	1030 2017 FORDX ESCAPE 4X2	742.18	430	1,882.18
VIVIEN-D	W559112	770 2005 JEEPX LIBERTY	455.39	1,625	2,080.39
VIVIEN-D	7578637	825 2005 CHVRL COBALT	1,504.34	1,333.15	2,837.49
VIVIEN-D	UA87791	960 2010 FORDX EXPLORER	2,919.71	2,168.51	5,088.22

	1238966	1028 2016 CHVRL COLORADO EC 4X2	16.65	0	16.65
	K518275	240 1995 DODGE RAM 3500	17.29	0	17.29
	GC08121	1039 2017 FORDX EXPLORER INTERCEP	34.08	0	34.08
	DB23107	977 2012 FORDX E450 BUS	86.99	0	86.99
	0131600	920, 2005, DIXSN, Kodiak ztr	66.66	45	111.66
	889	889, 2006, ANDERSON, T-1	29.38	0	149.38
	S343102	727 2003 DODGE DAKOTA PICK-UP	728.06	1,633.98	2,362.04